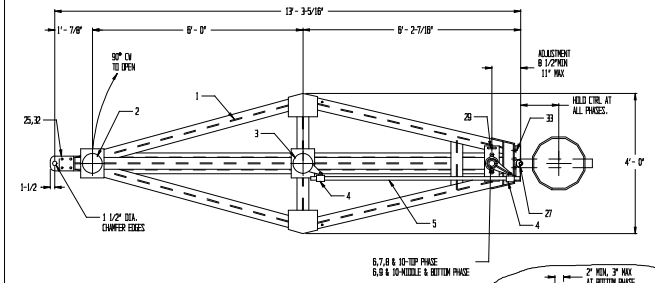

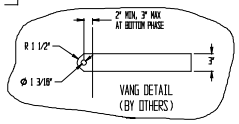

VANG DETAIL (BY OTHERS)

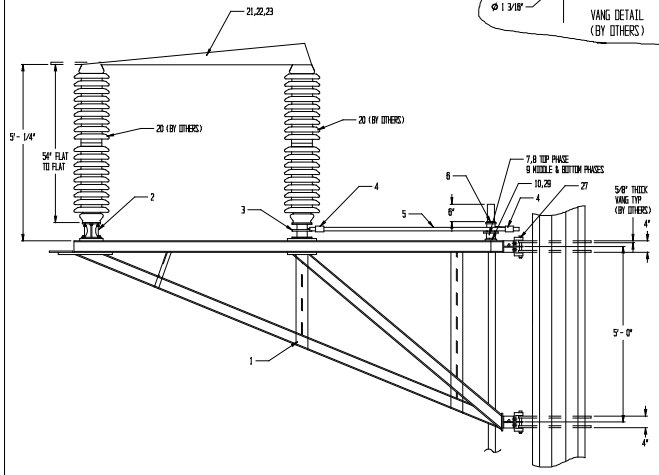

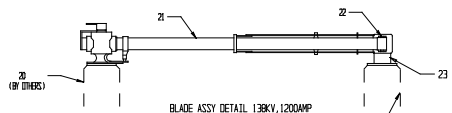

BLADE ASSY DETAIL 138KV,1200AMP

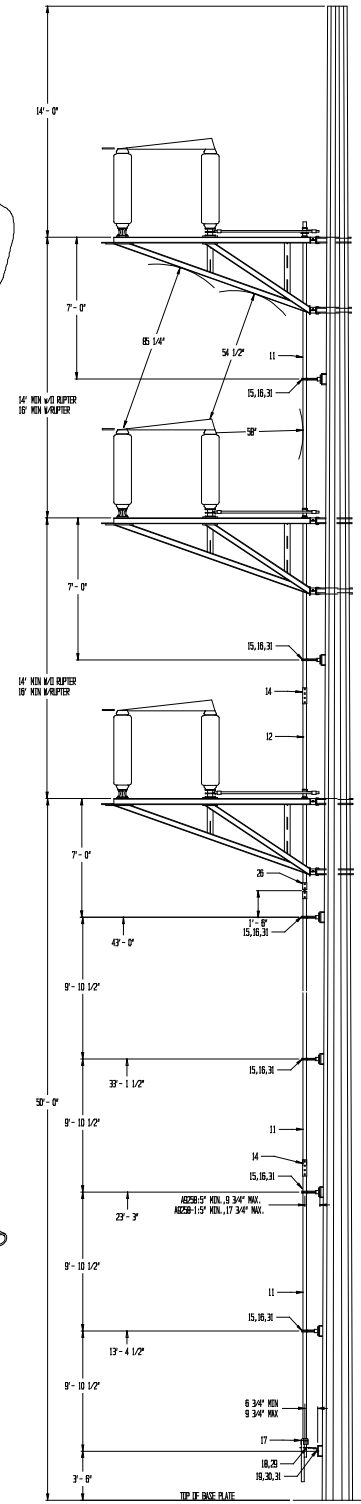

QUANTITY				PART	MATERIAL	ITEM	DESCRIPTION
			48	-	GALV	33	MACHINE BOLT 3/4"-10 X 2 1/2" N,LW
			12	-	GALV	32	MACHINE BOLT 5-8"-11 X 2 1/4" N,LW
			12	-	GALV	31	MACHINE BOLT 5-8"-11 X 1 3/4" N,LW
			12	-	GALV	30	MACHINE BOLT 1/2"-13 X 1 1/2" N,LW
			8	-	GALV	29	CARRIAGE BOLT 1/2"-13 X 1 1/2"
			-	-	-	28	-
			6	000773	GALV	27	FRAME PIN
			1	A9277	GALV	26	2" PIPE U-JOINT
			3	000759	GALV	25	DEAD END PLATE
			3	138111W/ RHG	-	24	INTERRUPTER (OPTIONAL)
			3	000187503	GALV	23	CONTACT JAW MTG PEDESTAL
			3	A9825	COPPER	22	CONTACT JAW ASSY R.H. 138KV 1200A (w/.025 SILVER)
			3	A9619	COPPER	21	BLADE ASSY R.H. 138KV 1200A
			6	-	-	20	INSULATOR-138KV
			1	003860RK/003696	GALV	19	OPERATOR MTG BRKT
			1	A9269	ALUM	18	LOCKING PLATE ASSY
			1	A9265	GALV	17	OPERATING HANDLE ASSY
			6	003696RK	GALV	16	PIPE GUIDE MTG BRKT
			6	A9258,A9258-1	ALUM	15	PIPE GUIDE (SEE DETAIL FOR LENGTHS)
			2	A9259	GALV	14	2" PIPE COUPLING ASSY
			-	RHD01360	GALV	13	2" IPS SCH 80 PIPE
			1	RHD01360	GALV	12	2" IPS SCH 80 PIPE @ 13' - 8"
			3	RHD01360	GALV	11	2" IPS SCH 80 PIPE @ 21' - 0"
			3	000854RK	ALUM	10	THRUST BEARING/PHASE GUIDE MTG BRKT
			2	001434AA	ALUM	9	PHASE GUIDE
			1	A9247	-	8	THRUST BEARING ASSY
			1	000295	GALV	7	PIPE SPACER @ 1"
			3	A9255	GALV	6	PIPE LEVER ASSY
			3	RHD01320	GALV	5	1" IPS SCH 80 PIPE @ 7' - 3"
			6	A9253	GALV	4	CLEVIS ASSY
			3	A9241	ALUM	3	PIVOT ASSY 1 LEVER (429)
			3	001760SD	GALV	2	INSULATOR PEDESTAL
			3	-	ALUM	1	IAD-138 SWITCH FRAME ASSY

TO: –
–
CUSTOMER P.O.# –
SERIAL NUMBER: –

REVISIONS	DATE	BY	MARK

138 KV 1200 AMP

IAD-138-12 STEEL-POLE MOUNTING w/VANGS

DRAWING #	BY	DATE
SK960220	TWO	2-14-96
SHEET 1 OF 1	APP'D BY	DATE

TURNER ELECTRIC CORPORATION
FAIRVIEW HEIGHTS, IL., USA

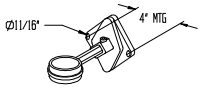

15,16 PIPE GUIDE ASSY
A9258:5' MIN.,9 3/4" MAX. LENGTH
A9258-1:5' MIN.,17 3/4" MAX. LENGTH

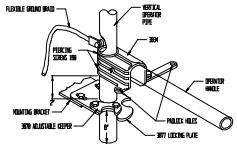

17-OPERATOR HANDLE DETAIL

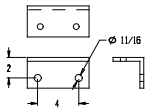

19-OPERATOR MOUNTING BRACKET DETAIL

SEE DWG #960220-1 FOR RUPTER DIMENSIONS