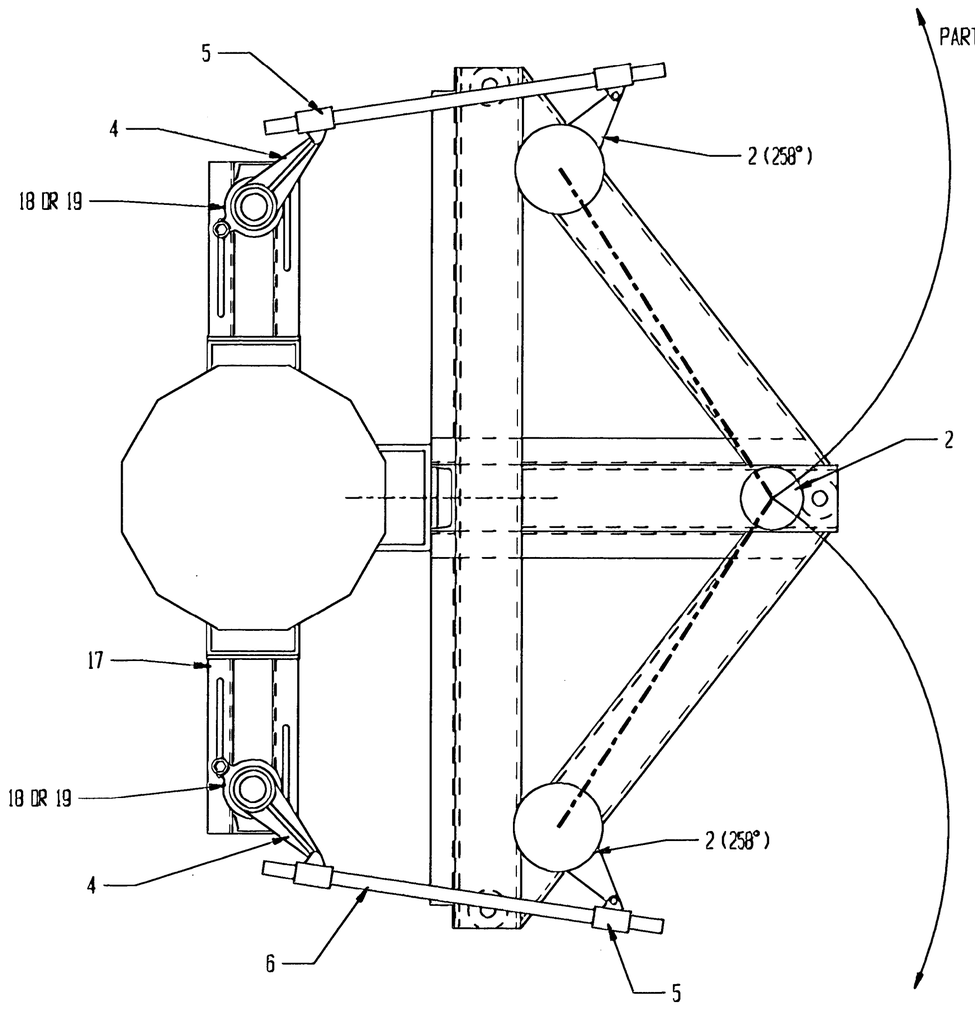

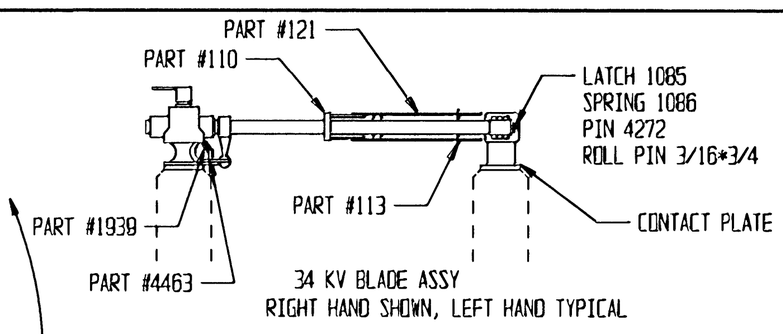

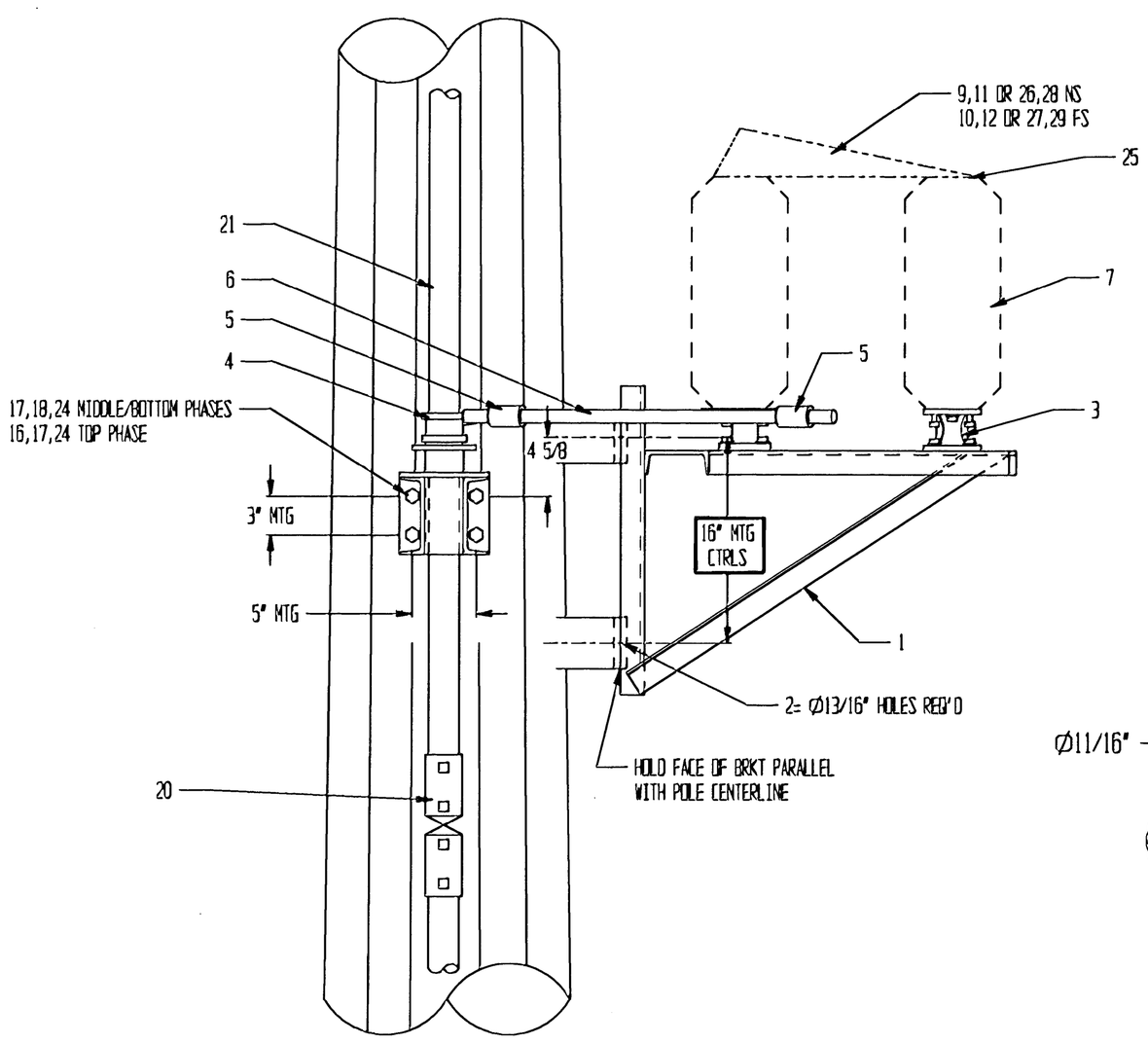

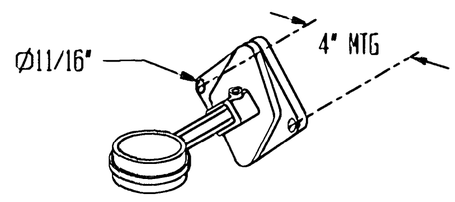

#16 PIPE GUIDE ASSY

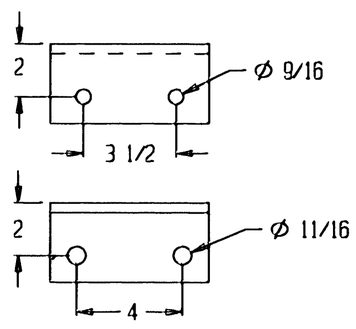

#14 OPERATOR MTG DETAIL

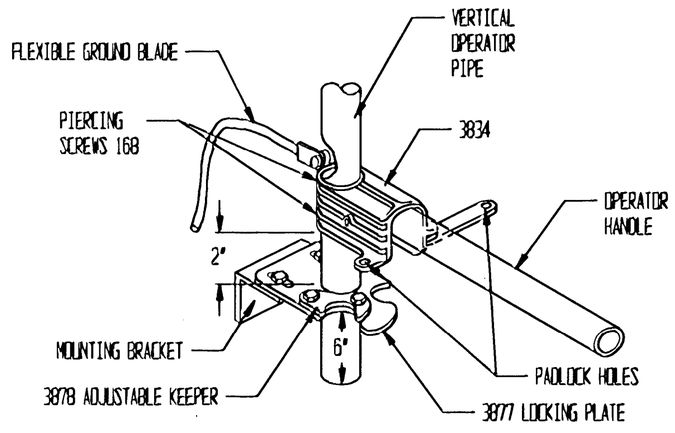

#13 OPERATOR HANDLE DETAIL

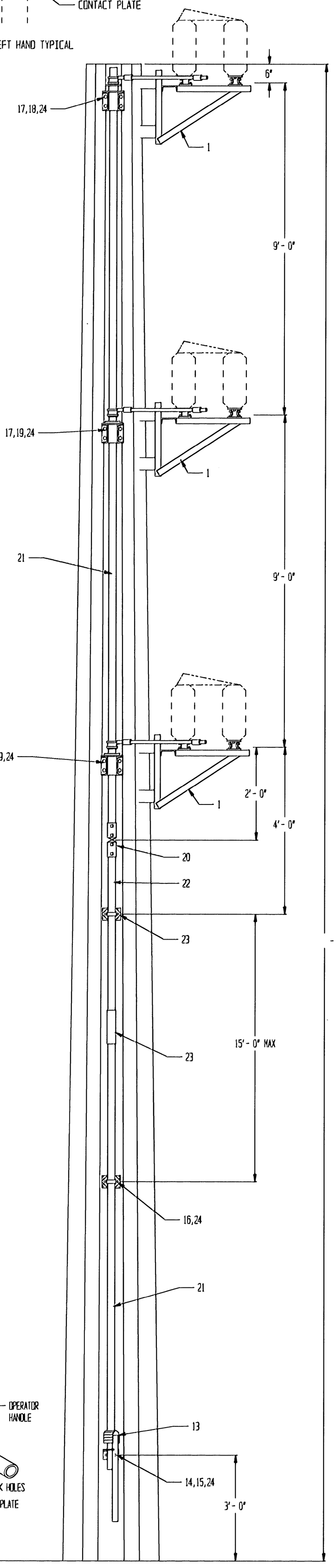

QUANTITY 600 AMP	QUANTITY 1200 AMP	PART	MATERIAL	ITEM	DESCRIPTION
-	-	-	-	30	-
3	-	-	A9523	29	34KV 600AMP LH JAW ASSY
3	-	-	A9522	28	34KV 600AMP RH JAW ASSY
3	-	COPPER	A9505	27	34KV 600AMP LH BLADE ASSY
3	-	COPPER	A9504	26	34KV 600AMP RH BLADE ASSY
3	3	A2354	ALUM	25	CONTACT PLATE
36	36	-	GALV	24	5/8 * 1 3/4 B,N,LW
2	2	A9259	GALV	23	2" PIPE COUPLING
2	2	RM901380	GALV	22	2" SCH.40 OPER PIPE @ 12' - 0"
4	4	RM901380	GALV	21	2" SCH.40 OPER PIPE @ 21' - 0"
2	2	A9277	GALV	20	U-JOINT ASSY
4	4	1414	ALUM	19	PHASE GUIDE TOP
2	2	A9247	-	18	T-BEARING
6	6	A4951	ALUM	17	T-BEARING/PHASE GUIDE MTG BRKT
4	4	A9257/3699	-	16	PIPE GUIDE ASSY w/3699 MTG PLATE
2	2	A9269	ALUM	15	LOCKING PLATE ASSY
2	2	3860	ALUM	14	OPERATOR MTG BRKT
1	1	A9284	GALV	13	2-WAY OPERATOR HANDLE ASSY
-	3	A9573	-	12	34KV 1200AMP LH JAW ASSY
-	3	A9572	-	11	34KV 1200AMP RH JAW ASSY
-	3	A9555	COPPER	10	34KV 1200AMP LH BLADE ASSY
-	3	A9554	COPPER	9	34KV 1200AMP RH BLADE ASSY
-	-	-	-	8	-
9	9	-	-	7	INSULATOR
6	6	RM901280	GALV	6	3/4" SCH.40 REACH ROD @ 30"
12	12	A9252	GALV	5	3/4" CLEVIS ASSY
6	6	A9255	GALV	4	7" PIPE LEVER ASSY
3	3	967	GALV	3	STATIONARY PEDESTAL
6	6	A9233	ALUM	2	1 LEVER PIVOT ASSY
3	3	A9334-1	ALUM	1	2D-34 STEEL POLE FRAME ASSY

TO:

CUSTOMER P.O.#

SERIAL NUMBER:

REVISIONS	DATE	BY	MARK

34 KV 600/1200 AMP

2D-34-6/12 AIR SWITCH
MTD ON STEEL POLE

DRAWING # SK940225
SHEET 1 OF 1

BY: TTC
DATE: 2-24-94
APP'D BY
DATE

TURNER ELECTRIC CORPORATION
FAIRVIEW HEIGHTS, IL., USA