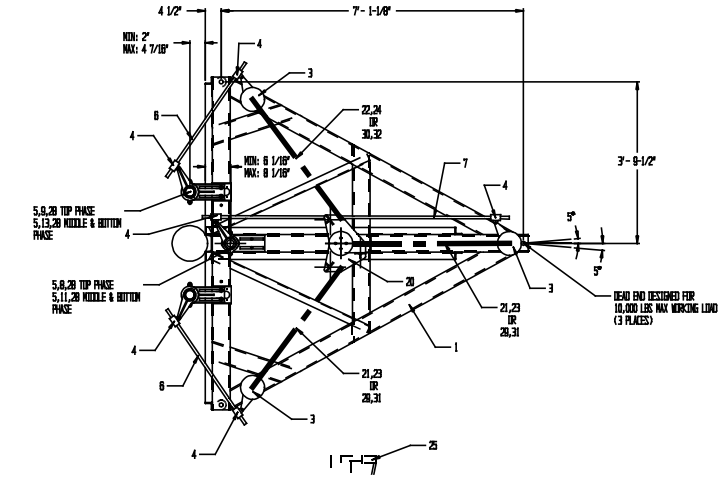

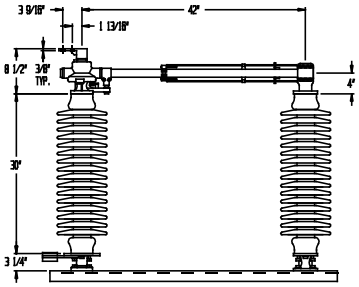

21,22,23,24 69KV 1200AMP BLADE ASSY RH SHOWN LH TYPICAL
29,30,31,32 69KV 600AMP RH & LH TYPICAL

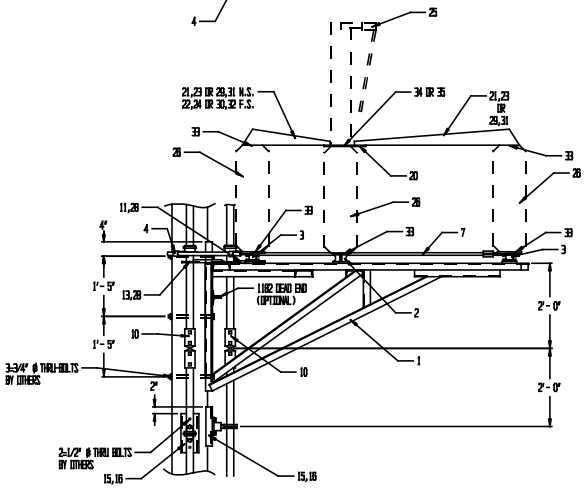

BOTTOM PHASE SHOWN

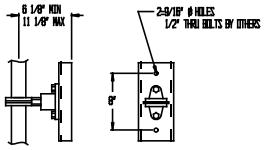

15,16 PIPE GUIDE DETAIL

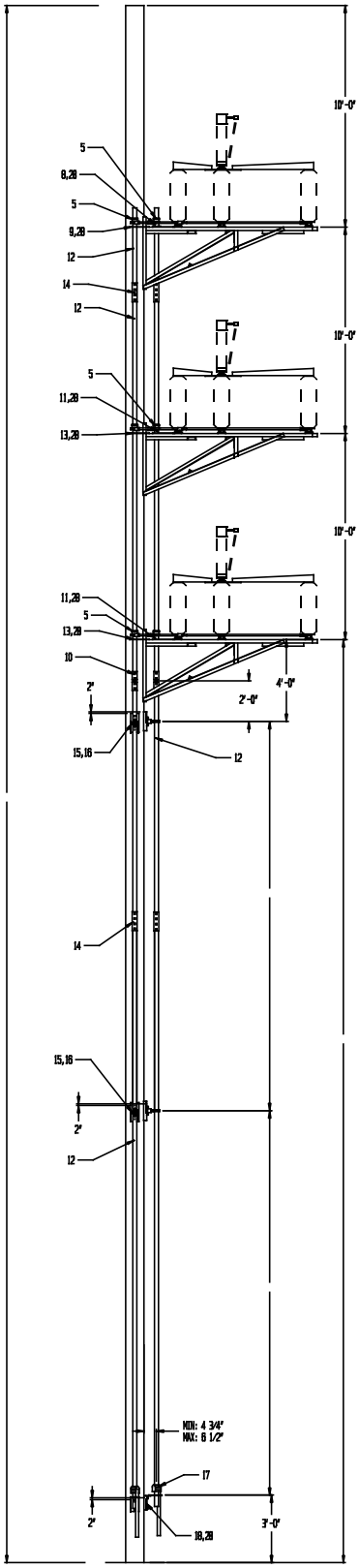

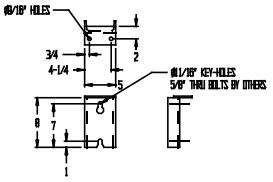

18 OPER MTG BRKT DETAIL

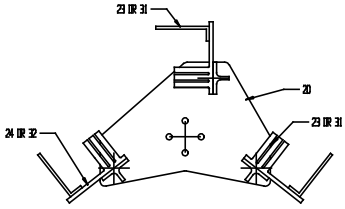

20 CONTACT MTG PLATE DETAIL
1200AMP SHOWN
600AMP TYPICAL

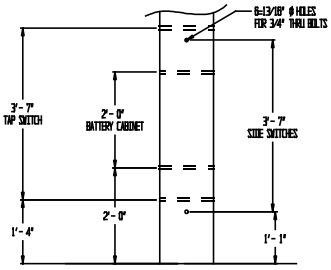

19 MOTOR OPER DRILLING DETAIL

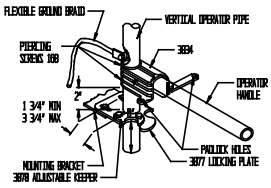

17 OPERATOR HANDLE DETAIL

				12	12	-	GALV	35	STUD 1/2"-13 X 2 1/4" N,LW (INSULATOR BOLTS w/RUPTER)
				12	12	-	GALV	34	MACHINE BOLT 1/2"-13 X 7/8" LW (INSULATOR BOLTS w/o RUPTER)
				81	84	-	GALV	33	MACHINE BOLT 1/2"-13 X 1 1/4" LW (INSULATOR BOLTS)
				-	3	A6531	-	32	69KV 600AMP JAW ASSY LH
				-	6	A6530	-	31	69KV 600AMP JAW ASSY RH
				-	3	A6509	-	30	69KV 600AMP BLADE ASSY LESS JAW LH
				-	6	A6508	-	29	69KV 600AMP BLADE ASSY LESS JAW RH
				24	24	-	GALV	28	CARRIAGE BOLT 1/2"-13 X 1 1/2" N,LW
				-	-	-	-	27	-
				12	12	SEE ORDER	-	26	INSULATOR 69KV
				-	-	-	-	25	INTERRUPTER (OPTIONAL)
				3	-	A6581	-	24	69KV 1200AMP JAW ASSY LH
				6	-	A6580	-	23	69KV 1200AMP JAW ASSY RH
				3	-	A6559	-	22	69KV 1200AMP BLADE ASSY LESS JAW LH
				6	-	A6558	-	21	69KV 1200AMP BLADE ASSY LESS JAW RH
				3	3	A5885	ALUM	20	CONTACT MOUNTING PLATE
				-	-	-	-	19	MOTOR OPERATOR (OPTIONAL)
				3	3	A6266	GALV	18	OPERATOR MOUNTING ASSY
				1	1	A6286	GALV	17	OPERATOR HANDLE ASSY 3 WAY (LESS MOUNTING)
				*	*	A6257	-	16	PIPE GUIDE ASSY (VARIES w/POLE HEIGHT)
				*	*	007231AX	ALUM	15	PIPE GUIDE MTG ASSY (VARIES w/POLE HEIGHT)
				*	*	A6259	GALV	14	2" IPS PIPE COUPLING (VARIES w/POLE HEIGHT)
				4	4	A6250	-	13	PHASE GUIDE MTG ASSY (220 & 169 BRKT)
				*	*	RH601380	GALV	12	2" IPS SCH 40 PIPE @ (VARIES w/POLE HEIGHT)
				2	2	000220ATX	ALUM	11	PHASE GUIDE
				3	3	A6277	GALV	10	U-JOINT ASSY
				2	2	A6249	-	9	THRUST BEARING ASSY w/1443 & 169 BRKT.
				1	1	A6248	-	8	THRUST BEARING ASSY w/1443 BRKT.
				3	3	RH601300	GALV	7	3/4" IPS SCH 80 PIPE @ 7'-4"
				6	6	RH601280	GALV	6	3/4" IPS SCH 40 PIPE @ 3'-6"
				9	9	A6255	GALV	5	PIPE LEVER ASSY
				18	18	A6252	GALV	4	3/4" IPS CLEVIS ASSY
				9	9	A6233	-	3	PIVOT ASSY 1 LEVER (6-1035 X 3-483)
				3	3	000987SIDMGN	GALV	2	INSULATOR PEDESTAL
				3	3	A6151	ALUM	1	30-69KV FRAME ASSY NP/CP
QUANTITY				PART		MATERIAL	ITEM	DESCRIPTION	

TO: -
-

CUSTOMER P.O.# -

SERIAL NUMBER: -

REVISIONS	DATE	BY	MARK
REDRAWN	6-7-84	LD	A
FRAME & CONTACT PLATE	6-18-85	WSI	B
REDRAWN TO CAD	1-16-03	NJR	C

69 KV 3006906/3132 600/1200 AMP
3006912/3132
CONTROL MECH. CONCRETE POLE

DRAWING # SK911028
SHEET 1 OF 1

BY	DATE
JMJ/BL	1-16-03
APP'D BY	DATE

TURNER ELECTRIC CORPORATION
FAIRVIEW HEIGHTS, IL., USA