POLE NOTE: IF SLIP JOINT IS USED, IT MUST BE PINNED AT THE JOINT

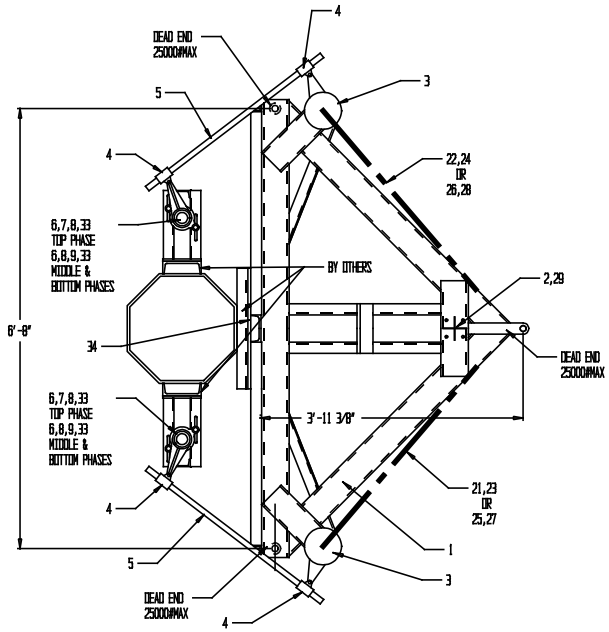

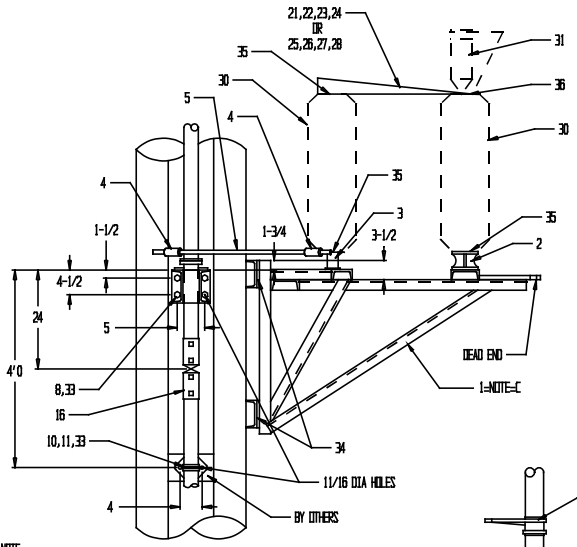

NOTE:
A=STD. NEMA PIN & GAP STATION POST INSULATOR ON 3" BOLT CIRCLE.
B=FLOR BOLT 1 3/4" X 1 3/4" NEMA CONNECTOR PAD-CONNECTOR (PT'L.
C=FRAMES ARE WELDED FROM STRUCTURAL ALUM 6061-T6.

BOTTOM PHASE SHOWN

CAUTION: MIN 10'-0" PHASE SPACING REQ'D W/TECO RUPTER
MIN. 9'-0" PHASE SPACING REQ'D W/O TECO RUPTER

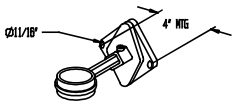

⑩ PIPE GUIDE ASSY

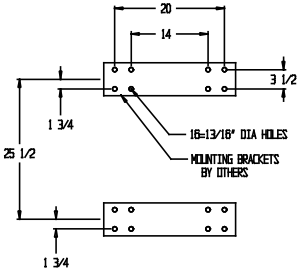

FRAME MOUNTING DETAIL
INSURE MTG. CHANNELS ARE ON SAME PLANE
(BY OTHERS)

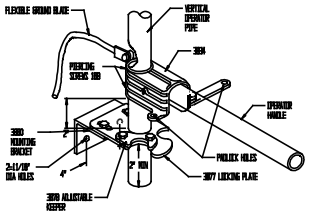

⑬⑭⑮ OPERATOR HANDLE DETAIL

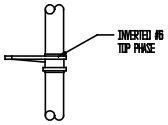

PIPE LEVER
TOP PHASE

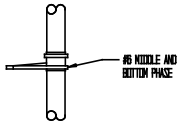

PIPE LEVER
MIDDLE & BOTTOM
PHASE

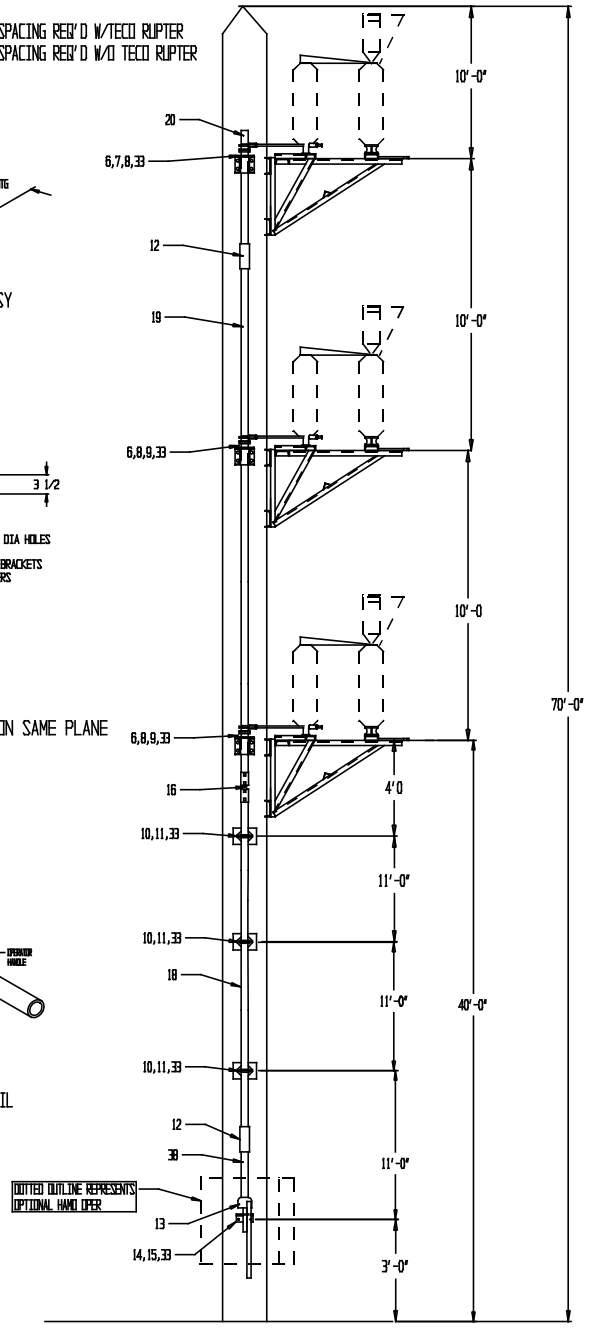

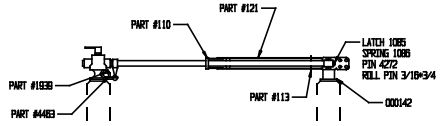

㉑ ㉒ ㉕ ㉖ 69KV BLADE ASSY
RIGHT HAND SHOWN,
LEFT HAND TYPICAL

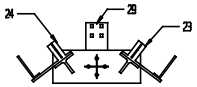

600 AMP CONTACT ASSY.

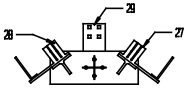

1200 AMP CONTACT ASSY.

REV.F: ADD POLE NOTE=11-13-07 MJR
REV.E: ADDED FRAME MTG. FOR STD. STEEL POLE

QUANTITY				PART	MATERIAL	ITEM	DESCRIPTION
		2	2	RM001380	GALV	38	2" IPS SCH 40 @ 5'-6"
		4	4	-	GALV	37	1/2"-13 x 1 1/2" CB,N,LW
		12	12	-	GALV	36	1/2" X 2 1/2" S,N,LW
		60	60	-	GALV	35	1/2" X 1 1/4" B,LW
		48	48	-	GALV	34	3/4" X 2 1/2" B,N,LW
		40	40	-	GALV	33	5/8" X 1 3/4"B,N,LW
		2	2	A9213	FIBERGLASS	32	8'-0" IGI (OPTIONAL)
		3	3	068127N/4067-2	-	31	INTERRUPTER (OPTIONAL)
		9	9	-	-	30	INSULATORS
		3	3	A2227	ALUM	29	CONTACT PLATE
		3	-	A9581	COPPER	28	69KV 1200AMP LH JAW ASSY.
		3	-	A9580	COPPER	27	69KV 1200AMP RH JAW ASSY.
		3	-	A9569	COPPER	26	69KV 1200AMP LH BLADE ASSY.
		3	-	A9568	COPPER	25	69KV 1200AMP RH BLADE ASSY.
		-	3	A9531	COPPER	24	69KV 600AMP LH JAW ASSY.
		-	3	A9530	COPPER	23	69KV 600AMP RH JAW ASSY
		-	3	A9509	COPPER	22	69KV 600AMP LH BALDE ASSY.
		-	3	A9508	COPPER	21	69KV 600 AMP RH BLADE ASSY
		2	2	RM001380	GALV	20	2" SCH.40 OPER. PIPE @ 4'-0"
		2	2	RM001380	GALV	19	2" SCH.40 OPER. PIPE @ 19'-0"
		2	2	RM001380	GALV	18	2" SCH.40 OPER. PIPE @ 21'-0"
		-	-	RM001380	GALV	17	2" SCH.40 OPER. PIPE @
		2	2	A9277	GALV	16	U-JOINT ASSY PIPE TO PIPE
		2	2	003860AX	ALUM	15	OPERATOR MTG. BRKT.
		2	2	A9293	ALUM	14	LOCKING PLATE ASSY.
		1	1	A9284	GALV	13	2 WAY OPER HANDLE ASSY.
		4	4	A9259	GALV	12	PIPE COUPLING
		4	4	003999AXM	ALUM	11	PIPE GUIDE MTG. BRKT.
		4	4	A9257F	-	10	PIPE GUIDE ASSY.
		4	4	001414AAX	ALUM	9	PHASE GUIDE
		6	6	A4951	ALUM	8	THRUST BEARING MTG. BRKT.
		2	2	A9247	-	7	THRUST BEARING ASSY.
		6	6	A9255	GALV	6	PIPE LEVER ASSY.
		6	6	RM001280	GALV	5	3/4" SCH.40 REACH ROD @ 3'-6"
		12	12	A9252	GALV	4	3/4" CLEVIS ASSY.
		6	6	A9233	ALUM	3	1 LEVER PIVOT ASSY. w/ BLADE STOPS (6=105)
		3	3	000087X100MM	GALV	2	INSULATOR PEDESTAL
		3	3	A9338	ALUM	1	20-69-6/12 SP.FRAME ASSY.

TO:

CUSTOMER P.O.# | SERIAL NUMBER

REVISIONS	DATE	BY	MARK
REDRAWN TO CAD	7-8-94	MK	A
REMOVED EXT ROD SEE SK940826	12-14-94	MK	B
REVISED TO STANDARD POLE MTG.	12/11/97	JJH	C
REVISED PER ARRIVAL	1-21-98	JJH	D

69 KV — 600/1200 AMP

20-69-6/12 AIR SWITCH STEEL POLE MTG.

DRAWING #	BY	DATE
SK781208	MCK	7-8-94
SHEET 1 OF 1	APP'D BY	DATE

TURNER ELECTRIC CORPORATION
FAIRVIEW HEIGHTS, IL., USA