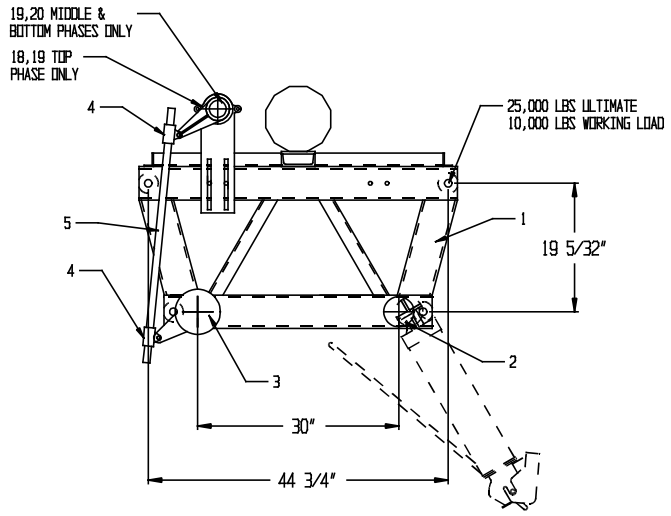

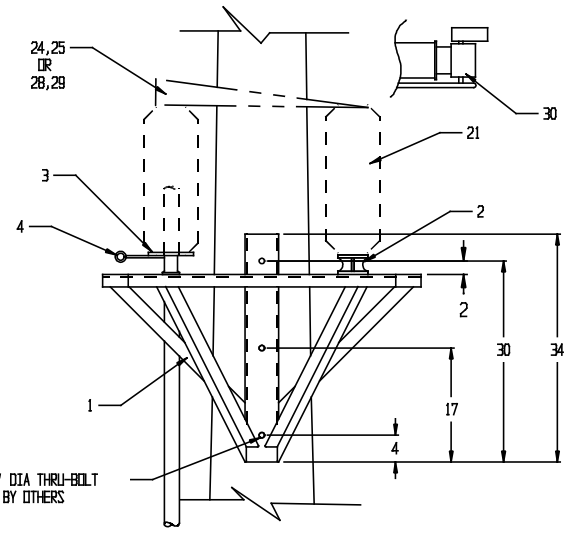

SECTION A-A =MIDDLE PHASE SHOWN

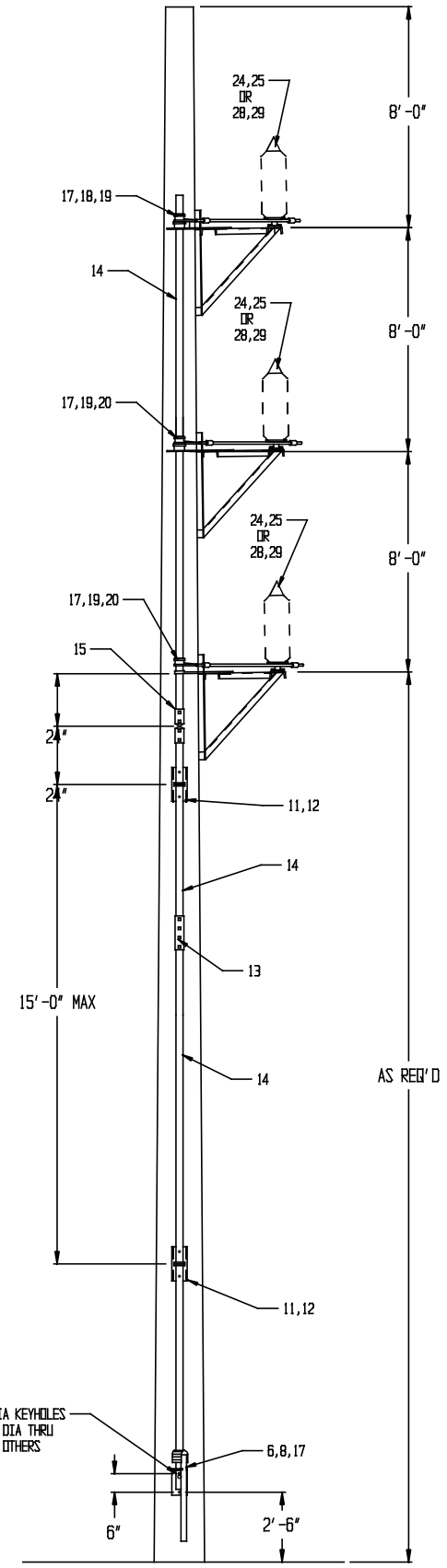

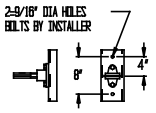

PIPE GUIDE DETAIL

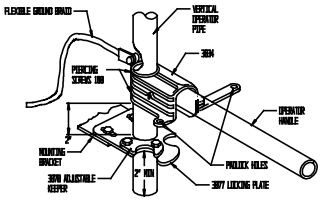

OPERATOR HANDLE DETAIL

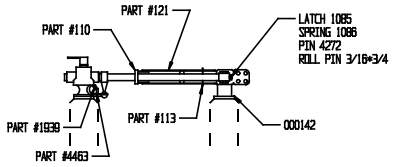

46 KV BLADE ASSY
RIGHT HAND SHOWN, LEFT HAND TYPICAL

QUANTITY				PART	MATERIAL	ITEM	DESCRIPTION
		-	-	-	-	30	INTERRUPTER (OPTIONAL)
		3	-	A6574	-	29	46KV 1200AMP RH JAW ASSY
		3	-	A6556	-	28	46KV 1200AMP RH BLADE ASSY.
		-	-	-	-	27	-
		-	-	-	-	26	-
		-	3	A6524	-	25	46KV 600AMP RH JAW ASSY
		-	3	A6506	-	24	46KV 600AMP RH BLADE ASSY.
		-	-	-	-	23	-
		-	-	-	-	22	-
		6	6	NP250540X	-	21	INSULATORS
		2	2	A6250	-	20	PHASE GUIDE ASSY
		3	3	A6255	GALV	19	PIPE LEVER ASSY.
		1	1	A6249	-	18	THRUST BEARING ASSY.
		8	8	-	GALV	17	CARRIAGE BOLT 1/2-13 X 1 1/2 N,LN
		-	-	-	-	16	-
		1	1	A6277	GALV	15	2" PIPE - PIPE U-JOINT
		*	*	RH601380	GALV	14	2" IPS VERT. OPER. PIPE SCH40 @ VARIES W/ POLE HEIGHT
		*	*	A6258	GALV	13	2" PIPE COUPLING VARIES W/ POLE HEIGHT
		*	*	A6257	-	12	PIPE GUIDE ASSY. VARIES W/ POLE HEIGHT
		*	*	007231AX	ALUM	11	PIPE GUIDE MTG. BRKT. VARIES W/ POLE HEIGHT
		-	-	-	-	10	-
		-	-	-	-	9	-
		1	1	A6284	GALV	8	OPERATOR HANDLE ASSY.
		-	-	-	-	7	-
		1	1	A6267	ALUM	6	OPERATOR MTG. BRKT. ASSY
		3	3	RH601280	GALV	5	3/4" REACH ROD SCH40 @ 3'- 3"
		6	6	A6252	GALV	4	3/4" CLEVIS ASSY
		3	3	A6233	ALUM	3	PIVOT ASSY. 1 LEVER (3 @ 4E3)
		3	3	000108SDMGM	GALV	2	INSULATOR PEDESTAL
		3	3	A6310-1	ALUM	1	1CD-46 CONC. POLE FRAME ASSY.

1200AMP 600AMP

TO: -

-

CUSTOMER P.O.# - SERIAL NUMBER: -

REVISIONS	DATE	BY	MARK
ITEM 2 WAS 000867SDMGM	11-12-07	KLR	A

46 KV 600/1200 AMP

1CD04606/1284 1CD04612/1284
1-WAY SWITCH ON LD STEEL POLE

DRAWING # SK030505 SHEET 1 OF 1

BY DATE 5-12-03

APP'D BY DATE

TURNER ELECTRIC CORPORATION
FAIRVIEW HEIGHTS, IL., USA