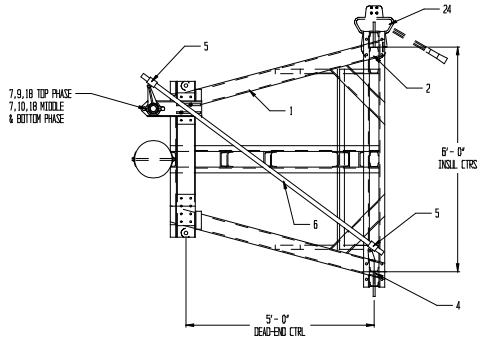

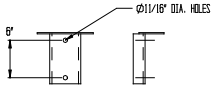

(11) OPER MTG BRKT DETAIL

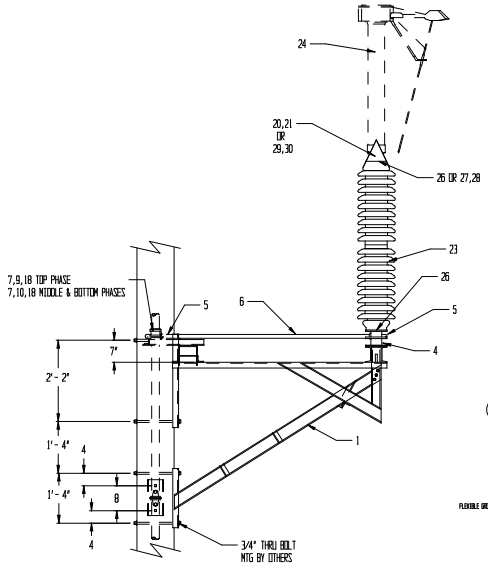

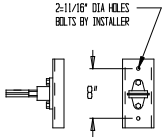

(14,25) PIPE GUIDE DETAIL

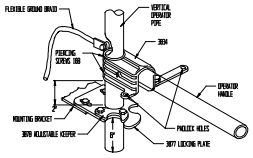

(12) OPERATOR HANDLE DETAIL

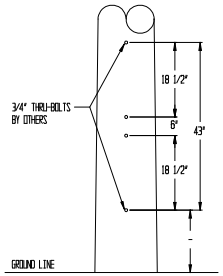

HAMD MTG. DETAIL

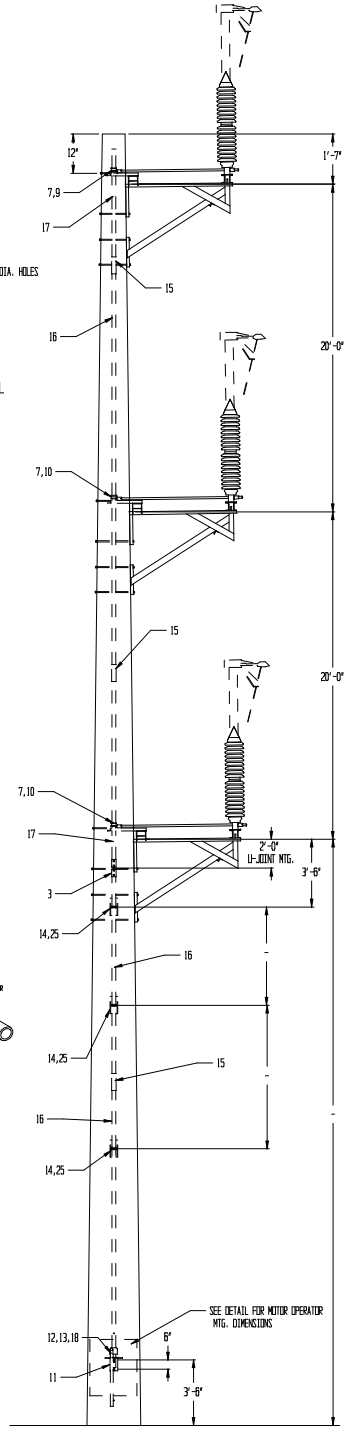

QUANTITY			PART	MATERIAL	ITEM	DESCRIPTION
		-	3	A8528	-	30	RH JAW ASSY 138KV 600AMP
		-	3	A8512	-	29	RH BLADE ASSY 138KV 600AMP
		12	12	-	GALV	28	MACHINE BOLT 5/8"-11 X 2 1/4" N,LW (RUPTER MTG BOLTS)
		21	21	-	GALV	27	STUD BOLT 5/8"-11 X 2 3/4" N,LW (INSULATOR BOLTS w/RUPTER)
		48	48	-	GALV	26	MACHINE BOLT 5/8"-11 X 1 1/2" LW (INSULATOR BOLTS)
		*	*	007231AX	ALUM	25	PIPE GUIDE MTG. BRKT. (VARIES w/POLE HEIGHT)
		-	-	-	-	24	TECO RUPTER (OPTIONAL)
		6	6	SEE ORDER	-	23	INSULATOR
		3	3	0001892D0MG	-	22	JAW PEDESTAL & SPACER
		3	-	A8678	-	21	RH JAW ASSY 138KV 1200AMP
		3	-	A8562	COPPER	20	RH BLADE ASSY 138KV 1200AMP
		-	-	-	-	19	-
		8	8	-	GALV	18	CARRIAGE BOLT 1/2"-13 X 1 1/2", N, LW
		*	*	RM801390	GALV	17	OPER PIPE 2" SCH. 80 ø (VARIES w/POLE HEIGHT)
		*	*	RM801390	GALV	16	OPER PIPE 2" SCH. 80 ø (VARIES w/POLEHEIGHT)
		*	*	A8259	GALV	15	PIPE COUPLING (VARIES w/POLE HEIGHT)
		*	*	A8258	-	14	P-GUIDE ASSY (VARIES w/POLE HEIGHT)
		1	1	A8269	ALUM	13	LOCKING PLATE ASSY
		1	1	A8265	GALV	12	OPER ASSY
		1	1	004228AX	ALUM	11	OPER BRKT
		2	2	0002D4TX	ALUM	10	PHASE GUIDE
		1	1	A8248	-	9	T-BEARING ASSY
		-	-	-	-	8	-
		3	3	A8255	GALV	7	7" LEVER ASSY
		3	3	RM801300	GALV	6	REACH ROD 1" SCH. 80 ø 102"
		6	6	A8253	GALV	5	1" CLEVIS ASSY
		3	3	A8241	ALUM	4	PIVOT ASSY (105)
		1	1	A8277	GALV	3	PIPE TO PIPE U-JOINT ASSY.
		3	3	0001703S0DMGH	GALV	2	INSULATOR PEDESTAL
		3	3	A8323MG	GALV	1	ICD-138 FRAME ASSY

ICD13812/1279
ICD18806/1279

TO:

CUSTOMER P.O.#

SERIAL NUMBER: 1279

REVISIONS	DATE	BY	MARK
ADD 600AMP BRM	3-26-07	MJR	A

138 KV 1200 AMP

1CD13812/1279
SIDE BREAK SWITCH ON CONCRETE POLE

DRAWING #	BY	DATE
SK020915	MJR	9-27-02
SHEET 1 OF 1	APP'D BY: LJD	DATE: 9-27-02

TURNER ELECTRIC CORPORATION
FAIRVIEW HEIGHTS, IL., USA

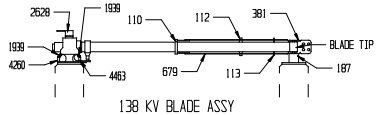

138 KV BLADE ASSY
RIGHT HAND SHOWN, LEFT HAND TYPICAL