NOTES: 1. FOR CORRECT CONTACT PRESSURE ON CLIP, ADJUST BLADES SO THEY ARE .013 ± .004" WIDER IN THE CLOSED POSITION THAN IN THE OPEN POSOTION. THIS DIMENSION MUST BE MEASURED ON THE OUTSIDE OF THE BLADES, ABOVE CONTACT POINTS

2. LUBRICATE CONTACT SURFACES PER SPEC

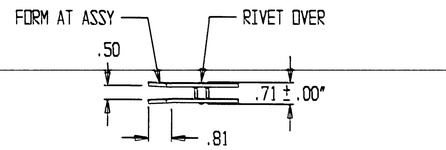

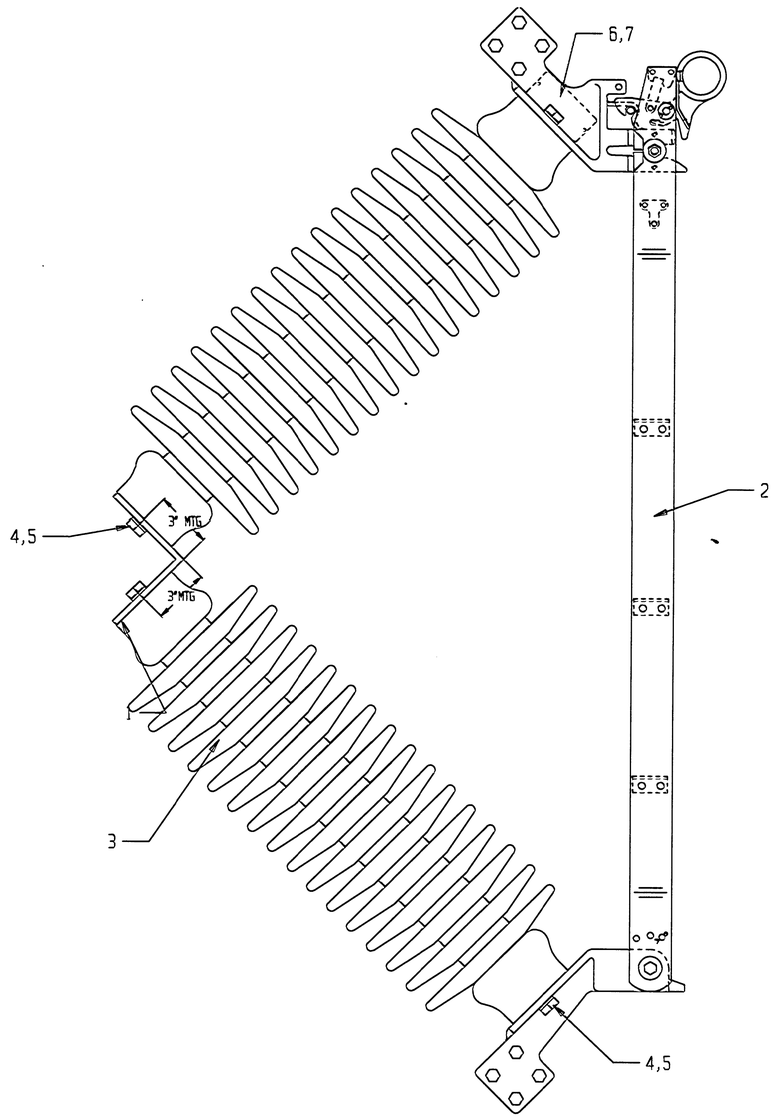

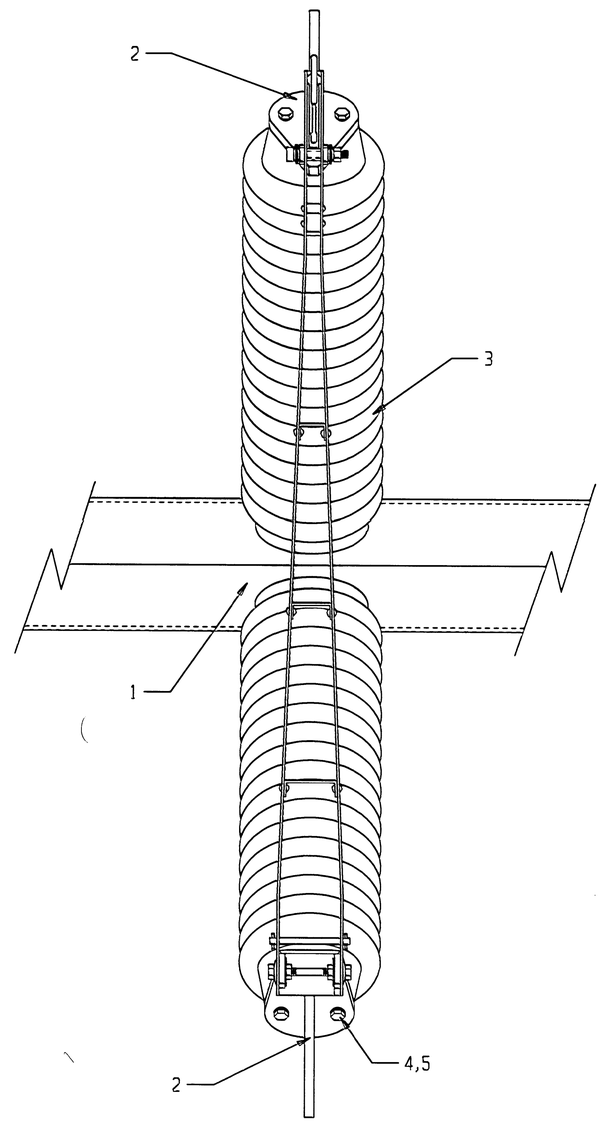

QUANTITY	PART	MATERIAL	ITEM	DESCRIPTION
	-		-	13	-
	-		-	12	-
	-		-	11	-
	-	-	-	10	-
	-		-	9	-
	-		-	8	-
	1	007944	H.H. CU.	7	BACKUP PLATE
	1		ALUM	6	NAMEPLATE
	8		GALV	5	LOCKWASHER 1/2"
	8		GALV	4	BOLT 1/2-13 * 1"
	2	-		3	INSULATOR TR210
	1	-		2	CURRENT CARRYING PARTS ASSY.
	1	007794	STEEL	1	SHIPPING BRACKET

TO: -
-

CUSTOMER P.O.# -

SERIAL NUMBER: -

REVISIONS	DATE	BY	MARK

69 KV

1200 AMP

BT2S-69-12 HOOKSTICK
W/90 DEG INSULATOR MTG

DRAWING # SK971222
SHEET 1 OF 1

BY BJW
APP'D BY

DATE 12-15-97
DATE

TURNER ELECTRIC CORPORATION
FAIRVIEW HEIGHTS, IL., USA