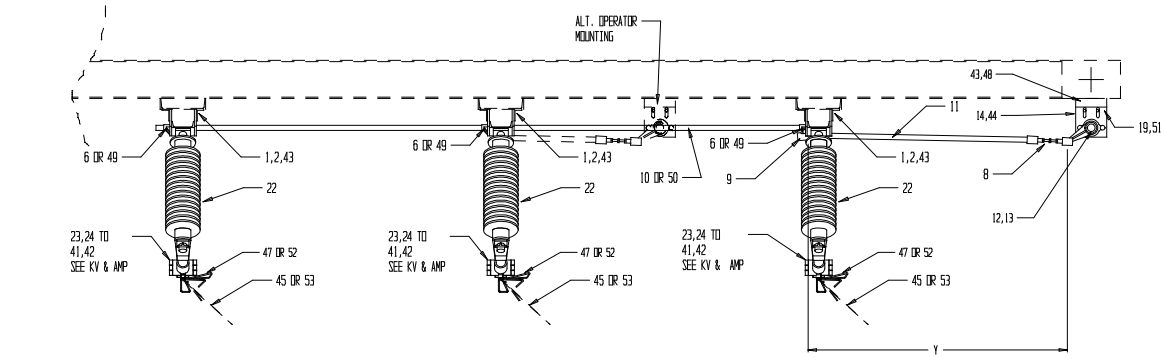

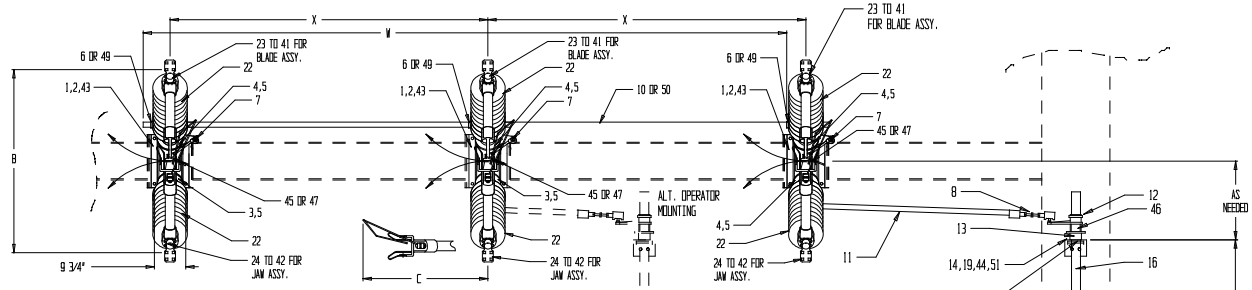

SWITCH OPEN

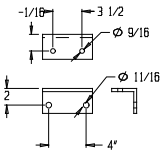

㊽ OPERATOR MTG. BRKT. DETAIL

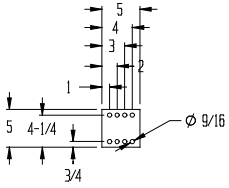

⑲ EXTENSION PLATE DETAIL

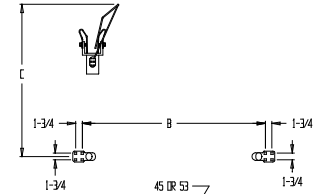

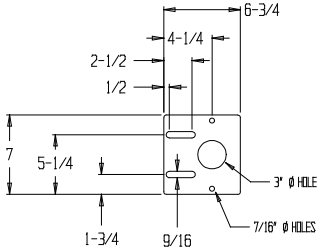

⑭ THRUST BEARING MOUNTING BRACKET

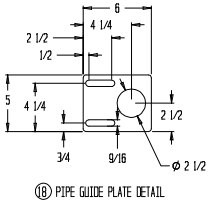

⑱ PIPE GUIDE PLATE DETAIL

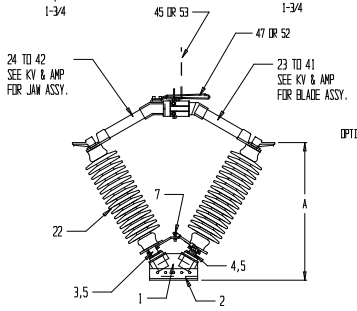

BLADE DETAIL

DIMENSIONS (in.)						
KV	A	B	C	W	X	Y
15	22 5/8	33 3/8	20 1/4	80	36	120
23	22 5/8	33 3/8	20 1/4	92	42	120
34.5	26	37 3/8	22	104	48	120
46	29 3/8	41 3/8	23 3/4	128	60	120
69	36 3/8	49 3/8	27 3/4	152	72	120

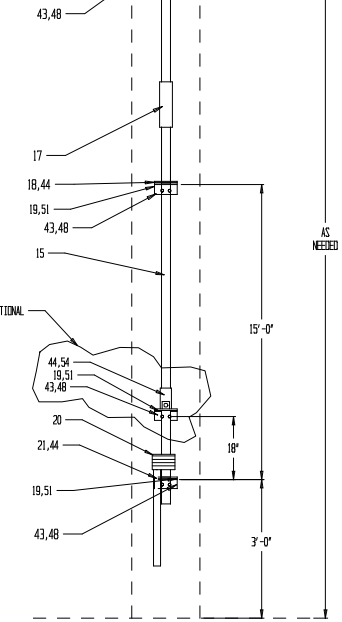

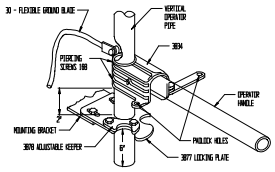

⑳ OPERATOR HANDLE DETAIL

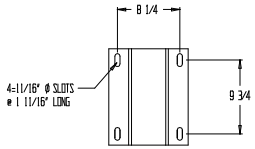

①② SWITCH BASE MTG. DETAIL

Ⓔ	-	-	-	-	-	-	-	-	-	A4301	ALUM	54	KIRK KEY MTG. BRKT. (OPTIONAL)
	-	-	-	-	-	-	-	-	-	A0004/A0007	-	53	15KV/23KV QUICKWHIP ASSY (OPTIONAL)
	-	-	-	3	3	-	-	3	3	A0004/A0006	-	52	15KV/23KV ARCING HORN ASSY (STANDARD)
	6	6	6	6	6	6	6	6	6	-	GALV	51	HXG 1/2 -13 X 1 1/2 N,LW
Ⓓ	-	-	1	1	1	-	-	1	1	RM001280	GALV	50	3/4" IPS SCH 40 PIPE @ V
Ⓑ	-	-	3	3	3	-	-	3	3	A9252	GALV	49	CLEVIS ASSY, 3/4" IPS
Ⓑ	3	3	3	3	3	3	3	3	3	003860SXG	GALV	48	OPER/P.G./T.B. MTG BRKT
	3	3	3	-	-	3	3	3	-	A0004/A0005	-	47	ARCING HORN ASSY (STANDARD)
Ⓑ	1	1	1	1	1	1	1	1	1	008284SXG	GALV	46	PIPE SPACER @ 2" LONG
Ⓓ	-	-	-	-	-	-	-	-	-	A0003/A0004	-	45	QUICK WHIP ASSY (OPTIONAL)
	6	6	6	6	6	6	6	6	6	-	GALV	44	CARRIAGE BOLT 1/2"-13 X 1 1/2",N,LW
	18	18	18	18	18	18	18	18	18	-	GALV	43	MACHINE BOLT 5/8"-11 X 1 3/4" N,LW
	3	-	-	-	-	-	-	-	-	V150	ALUM	42	JAW ASSY 69KV 1200A
	3	-	-	-	-	-	-	-	-	V114	ALUM	41	BLADE ASSY 69KV 1200A
	-	3	-	-	-	-	-	-	-	V144	ALUM	40	JAW ASSY 46KV 1200A
	-	3	-	-	-	-	-	-	-	V108	ALUM	39	BLADE ASSY 46KV 1200A
	-	-	3	-	-	-	-	-	-	V138	ALUM	38	JAW ASSY 34.5KV 1200A
	-	-	3	-	-	-	-	-	-	V102	ALUM	37	BLADE ASSY 34.5KV 1200A
	-	-	-	3	-	-	-	-	-	V084	ALUM	36	JAW ASSY 23KV 1200A
	-	-	-	3	-	-	-	-	-	V096	ALUM	35	BLADE ASSY 23KV 1200A
	-	-	-	-	3	-	-	-	-	V078	ALUM	34	JAW ASSY 15KV 1200A
	-	-	-	-	3	-	-	-	-	V090	ALUM	33	BLADE ASSY 15KV 1200A
	-	-	-	-	-	3	-	-	-	V148	ALUM	32	JAW ASSY 69KV 600A
	-	-	-	-	-	3	-	-	-	V112	ALUM	31	BLADE ASSY 69KV 600A
	-	-	-	-	-	-	3	-	-	V142	ALUM	30	JAW ASSY 46KV 600A
	-	-	-	-	-	-	3	-	-	V106	ALUM	29	BLADE ASSY 46KV 600A
	-	-	-	-	-	-	-	3	-	V136	ALUM	28	JAW ASSY 34.5KV 600A
	-	-	-	-	-	-	-	3	-	V100	ALUM	27	BLADE ASSY 34.5KV 600A
	-	-	-	-	-	-	-	-	3	V082	ALUM	26	JAW ASSY 23KV 600A
	-	-	-	-	-	-	-	-	3	V094	ALUM	25	BLADE ASSY 23KV 600A
	-	-	-	-	-	-	-	-	-	V077	ALUM	24	JAW ASSY 15KV 600A
	-	-	-	-	-	-	-	-	3	V088	ALUM	23	BLADE ASSY 15KV 600A
	6	6	6	6	6	6	6	6	6	-	-	22	INSULATOR - SEE ORDER FOR DESCRIPTION
	1	1	1	1	1	1	1	1	1	A9269	ALUM	21	LOCKING PLATE ASSY
	1	1	1	1	1	1	1	1	1	A9264	GALV	20	OPERATING HANDLE ASSY
Ⓑ	3	3	3	3	3	3	3	3	3	005866SXG	GALV	19	P.G./OPER./T.B. EXT PLATE
Ⓑ	1	1	1	1	1	1	1	1	1	008437SXG	GALV	18	PIPE GUIDE
	1	1	1	1	1	1	1	1	1	A9259	GALV	17	PIPE COUPLING
	1	1	1	1	1	1	1	1	1	RM001380	GALV	16	2" IPS SCH 40 PIPE @ 10' - 6"
	1	1	1	1	1	1	1	1	1	RM001380	GALV	15	2" IPS SCH 40 PIPE @ 21'-0"
Ⓑ	1	1	1	1	1	1	1	1	1	009163SXG	GALV	14	THRUST BEARING MTG BRKT
	1	1	1	1	1	1	1	1	1	A9247	-	13	THRUST BEARING ASSY
	1	1	1	1	1	1	1	1	1	A9255	GALV	12	PIPE LEVER ASSY
	1	1	1	1	1	1	1	1	1	RM001320	GALV	11	1" IPS SCH 80 PIPE @ Y (FIELD CUT)
	1	1	-	-	-	1	1	-	-	RM001320	GALV	10	1" IPS SCH 80 PIPE @ W
	1	1	1	1	1	1	1	1	1	A9282	-	9	CLEVIS CONVERTOR ASSY
	1	1	1	1	1	1	1	1	1	A9280	-	8	ADJUSTABLE CLEVIS CONVERTOR ASSY
	3	3	3	3	3	3	3	3	3	A9283	-	7	ROTATING INSULATOR CLEVIS ASSY
	3	3	-	-	-	3	3	-	-	A9253	GALV	6	CLEVIS ASSY, 1" IPS
	6	6	6	6	6	6	6	6	6	A9291	ALUM	5	BLADE STOP
	4	4	4	4	4	4	4	4	4	A9236-2	BRASS	4	PIVOT ASSY 2 LEVER (25B)
	2	2	2	2	2	2	2	2	2	A9235-2	BRASS	3	PIVOT ASSY 1 LEVER (25B)
Ⓑ	6	6	6	6	6	6	6	6	6	008690SXG	GALV	2	SWITCH BASE MOUNTING ANGLE
Ⓑ	3	3	3	3	3	3	3	3	3	008691SXG	GALV	1	SWITCH BASE
	QUANTITY									PART	MATERIAL	ITEM	DESCRIPTION
	TCV2V06012/110	TCV2V0461 2/106	TCV2V0412/102	TCV2V0232/138	TCV2V0512/132	TCV2V0686/105	TCV2V0406/101	TCV2V0236/135	TCV2V0136/131				

TO: ITEM 10-12

CUSTOMER P.O.#: SERIAL NUMBER:

REVISIONS	DATE	BY	MARK
SHOW 'C' TO END OF ARCING HORNS	7-8-02	MRP	D
REV. PART #'S OF 45 AND 50	10-6-00	MJR	C
ADD FOURTHSHIFT #'S;REVISE QTY. ON ITEM 49	9-13-00	BJW	B
REVISE QTY. ON ITEM 44	2-24-98	MRP	A

DRAWING # SK970827 SHEET 1 OF 1

BY	DATE
MRP	9-2-97
APP'D BY	DATE

600/1200 AMP

TCV2V-15 THRU 69KV 600/1200 AMP CENTER "V" SWITCH

TURNER ELECTRIC CORPORATION
FAIRVIEW HEIGHTS, IL., USA

ADD ITEM 54 9-14-04 MJR/LD E