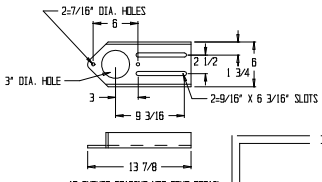

15 THRUST BEARING MTG BRKT DETAIL

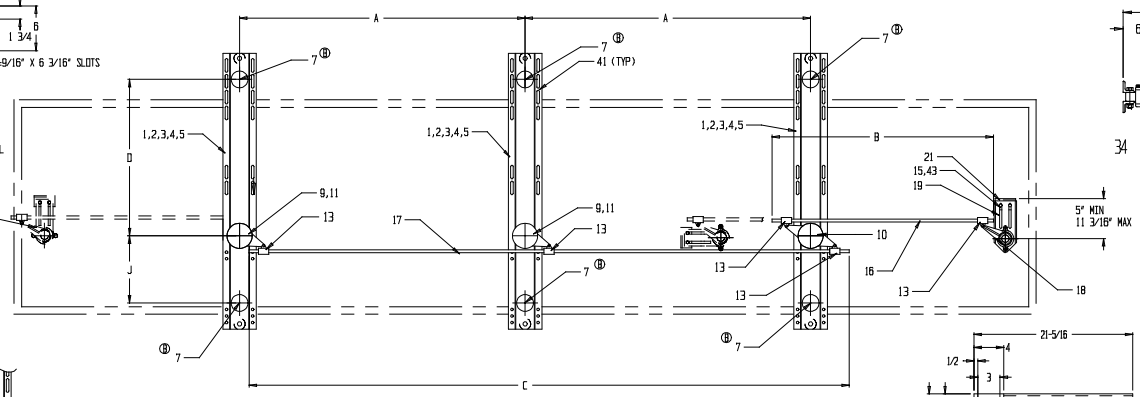

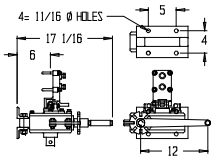

34 WORM GEAR OPERATOR DETAIL

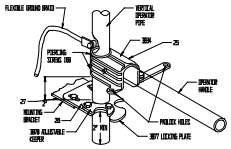

25,26 OPERATOR HANDLE DETAIL

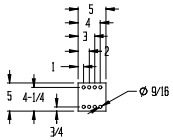

27 OPER. EXTENSION PLATE DETAIL

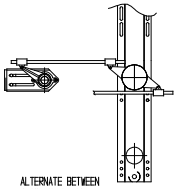

ALTERNATE BETWEEN PHASE MOUNTING

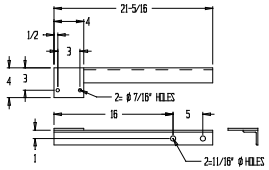

37 AUX SW. MTG BRKT DETAIL

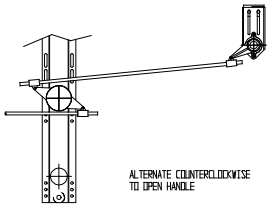

ALTERNATE COUNTERCLOCKWISE TO OPEN HANDLE

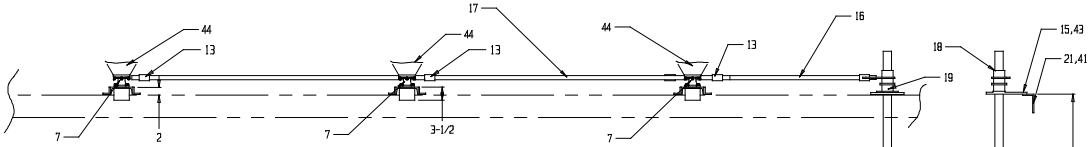

NOTE 1: FOR OPTIONAL KIRK KEY MOUNTING PROVISION, ADD THE FOLLOWING:
1 = A4301 KIRK KEY MTG BRKT
1 = 005966SXG EXTENSION PLATE
1 = 003860SXG MOUNTING BRKT
2 = MACHINE BOLT, 5/8-11 X 1 3/4",N,LW
2 = MACHINE BOLT, 1/2-13 X 1 1/2",N,LW
2 = CARRIAGE BOLT, 1/2-13 X 1 1/2",N,LW

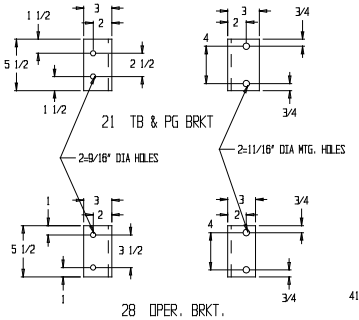

21 TB & PG BRKT

28 OPER. BRKT.

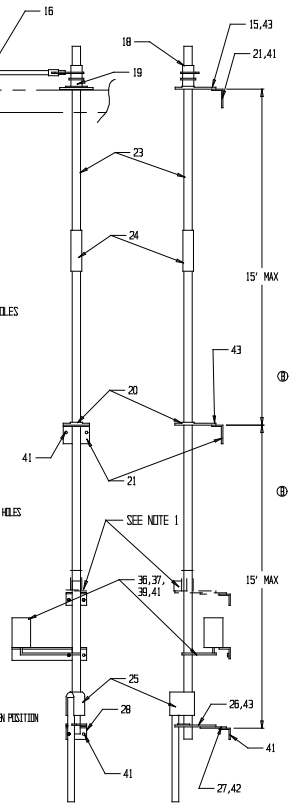

DIMENSIONS (in.)												
KV	A	B	C	D	E	F	G	H*	I*	J	K	L
15	36	96	84	15	43	N/A	N/A	16 1/4	45 1/8	14	14 7/8	16 5/8
23	48	96	108	18	46	N/A	N/A	20 1/4	52 1/8	14	14 7/8	16 5/8
34.5	60	120	132	24	52	N/A	N/A	24 1/4	62 1/8	14	14 7/8	16 5/8
46	72	120	156	30	59	27 7/8	32 1/8	28 1/4	72 1/8	15	15 7/8	17 5/8
69	84	120	180	42	74	30 7/8	35 1/8	36 1/4	92 1/8	18	18 7/8	20 5/8

*: ADD 3/4" TO H & I WHEN MOUNTING AN INTERRUPTER ON SWITCH

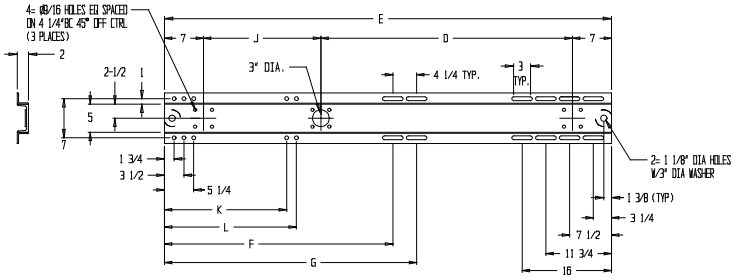

1,2,3,4,5 SWITCH BASE DETAIL

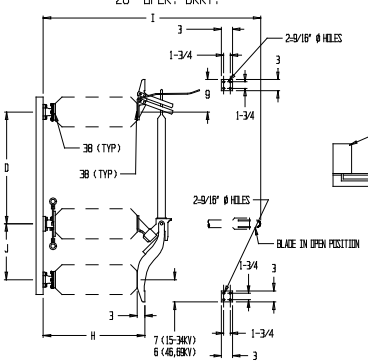

ITEMS 29-33 BLADE DETAIL

-	-	-	-	-	-	-	9	9	9	9	9	-	-	44	INSULATOR-SEE ORDER FOR DESCRIPTION
-	-	-	-	-	-	-	6	6	6	6	6	-	GALV	43	CARRIAGE BOLT 1/2-13 X 1 1/2 NUT,LW
-	-	-	-	-	-	-	2	2	2	2	2	-	GALV	42	MACHINE BOLT 1/2-13 X 1 1/2 NUT,LW
-	-	-	-	-	-	-	20	20	20	20	20	-	GALV	41	MACHINE BOLT 5/8-11 X 1 3/4 NUT,LW
-	-	-	-	-	-	-	-	-	-	-	-	-	-	40	-
-	-	-	-	-	-	-	2	2	2	2	2	-	GALV	39	MACHINE BOLT 3/8"-16 X 1" N,LW
-	-	-	-	-	-	-	72	72	72	72	72	-	GALV	38	MACHINE BOLT 1/2-13 X 1 1/4", LW
-	-	-	-	-	-	-	1	1	1	1	1	-	GALV	37	AUX. SW. MTG BRKT (OPTIONAL)
-	-	-	-	-	-	-	1	1	1	1	1	SEE ORDER	ALUM	36	S.S. AVS-1 AUX. SW. (OPTIONAL)
-	-	-	-	-	-	-	-	-	-	-	-	-	-	35	-
-	-	-	-	-	-	-	-	-	-	-	-	A11281	-	34	WORM GEAR OPERATOR 25:1 (OPTIONAL)
-	-	-	-	-	-	-	3	-	-	-	-	DS043245466G1	ALUM	33	TMK40A BLADE ASSY 69KV 1200A
-	-	-	-	-	-	-	-	3	-	-	-	DS043245665G1	ALUM	32	TMK40A BLADE ASSY 46KV 1200A
-	-	-	-	-	-	-	-	-	3	-	-	DS043245270I	ALUM	31	TMK40A BLADE ASSY 34.5KV 1200 AMP
-	-	-	-	-	-	-	-	-	-	3	-	DS043245270C1	ALUM	30	TMK40A BLADE ASSY 23KV 1200 AMP
-	-	-	-	-	-	-	-	-	-	-	3	DS043245278I	ALUM	29	TMK40A BLADE ASSY 15KV 1200 AMP
-	-	-	-	-	-	-	1	1	1	1	1	003860SXG	GALV	28	OPERATING HANDLE MOUNTING BRACKET
-	-	-	-	-	-	-	1	1	1	1	1	005966SXG	GALV	27	EXTENSION PLATE
-	-	-	-	-	-	-	1	1	1	1	1	A9270	ALUM	26	OPERATING HANDLE LOCKING PLATE ASSY
-	-	-	-	-	-	-	1	1	1	1	1	A9265	GALV	25	OPERATING HANDLE ASSY
-	-	-	-	-	-	-	1	1	1	1	1	A9259	GALV	24	2" PIPE COUPLING
-	-	-	-	-	-	-	1	1	1	1	1	RM301380	GALV	23	2" IPS SCH 40 PIPE @ 10'-6"
-	-	-	-	-	-	-	1	1	1	1	1	RM301380	GALV	22	2" IPS SCH 40 PIPE @ 21'-0"
-	-	-	-	-	-	-	2	2	2	2	2	007133SXG	GALV	21	MOUNTING ANGLE
-	-	-	-	-	-	-	1	1	1	1	1	A9290	ALUM	20	PIPE GUIDE ASSY
-	-	-	-	-	-	-	1	1	1	1	1	A9247	-	19	THRUST BEARING ASSY
-	-	-	-	-	-	-	1	1	1	1	1	A9255	GALV	18	PIPE LEVER ASSY
-	-	-	-	-	-	-	1	1	1	1	1	RM301320	GALV	17	1" IPS SCH 80 PIPE @ (SEE DIM. C)
-	-	-	-	-	-	-	1	1	1	1	1	RM301320	GALV	16	1" IPS SCH 80 PIPE @ (SEE DIM. B)
-	-	-	-	-	-	-	1	1	1	1	1	011982SXG	GALV	15	THRUST BEARING MTG BRKT
-	-	-	-	-	-	-	-	-	-	-	-	-	-	14	-
-	-	-	-	-	-	-	5	5	5	5	5	A9253	GALV	13	1" CLEVIS ASSY
-	-	-	-	-	-	-	-	-	-	-	-	-	-	12	-
-	-	-	-	-	-	-	2	2	2	2	2	A9291S	GALV	11	BLADE STOP
-	-	-	-	-	-	-	1	1	1	1	1	A9234	ALUM	10	PIVOT ASSY 3" B.C. 2 LEVER (258)
-	-	-	-	-	-	-	2	2	2	2	2	A9233	ALUM	9	PIVOT ASSY 3" B.C. 1 LEVER (258)
-	-	-	-	-	-	-	-	-	-	-	-	-	-	8	-
-	-	-	-	-	-	-	6	6	6	6	6	000109-1SDXMGN	GALV	7	3" BC INSULATOR PEDESTAL
-	-	-	-	-	-	-	-	-	-	-	-	-	-	6	-
-	-	-	-	-	-	-	3	-	-	-	-	008963SXG	GALVSTL	5	SWITCH BASE, TMK40 69KV 600/1200A
-	-	-	-	-	-	-	-	3	-	-	-	013653SXG	GALVSTL	4	SWITCH BASE, TMK40 46KV 600/1200A
-	-	-	-	-	-	-	-	-	3	-	-	012366SXG	GALVSTL	3	SWITCH BASE, TMK40 34.5KV 600/1200A
-	-	-	-	-	-	-	-	-	-	3	-	013655SXG	GALVSTL	2	SWITCH BASE, TMK40 23KV 600/1200A
-	-	-	-	-	-	-	-	-	-	-	3	013654SXG	GALVSTL	1	SWITCH BASE, TMK40 15KV 600/1200A
QUANTITY							TMK40A0692/30	TMK40A0462/30	TMK40A0342/30	TMK40A0232/30	TMK40A0152/30	PART	MATERIAL	ITEM	DESCRIPTION

TO:

CUSTOMER P.O.#

SERIAL NUMBER:

REVISIONS	DATE	BY	MARK
ADD ITEM 15; A9247 WAS A9248	3-11-03	MRP	A
ITEM 7 WAS 009654SXMGN, DEL ITEM 12 (005626SDXG @ 6)	7-1-03	BW	B
ADD ITEMS 36 & 37	7-16-03	MJR	C
MOMENTARY CURRENT RATING WAS 40KA	8-1-03	MJR	D

DRAWING #
SK020208
SHEET 1 OF 1

BY	DATE
LJXIL D	2-7-02
APP'D BY	DATE

____KV ____1200____ AMP

TMK40A 15KV THRU 69KV 1200A, 61KA MOM
HORIZ.MTD FAST SWITCH 30°C

TURNER ELECTRIC CORPORATION
FAIRVIEW HEIGHTS, IL., USA