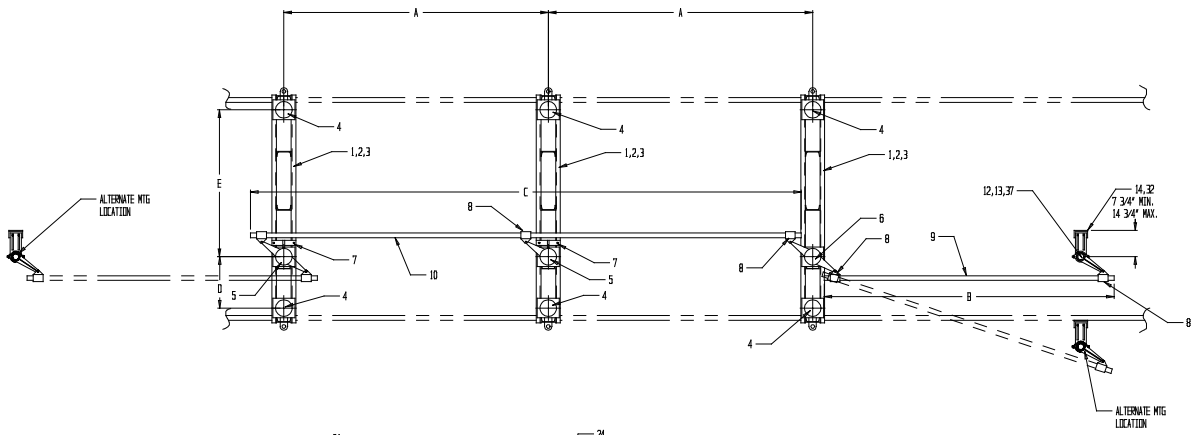

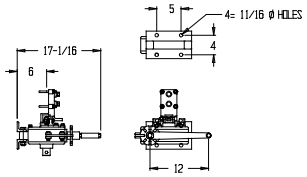

㊱ OPTIONAL WORM GEAR OPERATOR

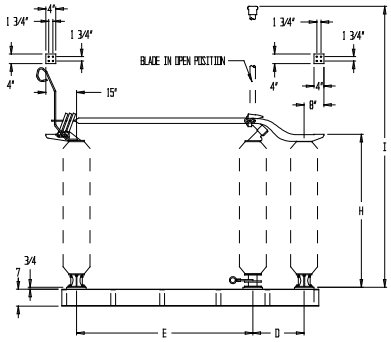

㉕㉖㉗ 3000A BLADE DETAIL

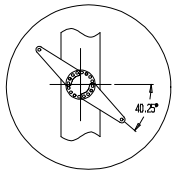

PIVOT SETTING DETAIL

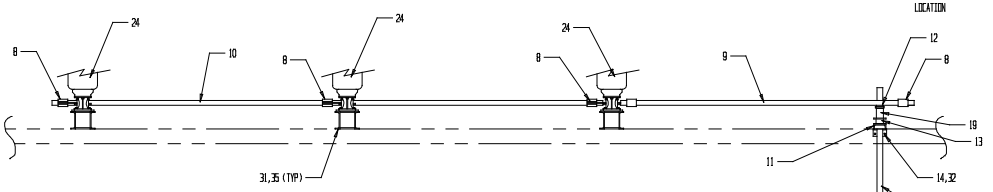

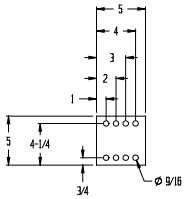

㉓ EXTENSION PLATE DETAIL

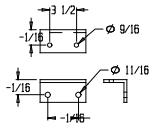

㉒ OPERATOR MTG BRKT DETAIL

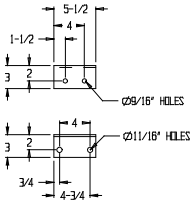

⑭ THRUST BRG & PIPE GUIDE MTG BRKT DETAIL

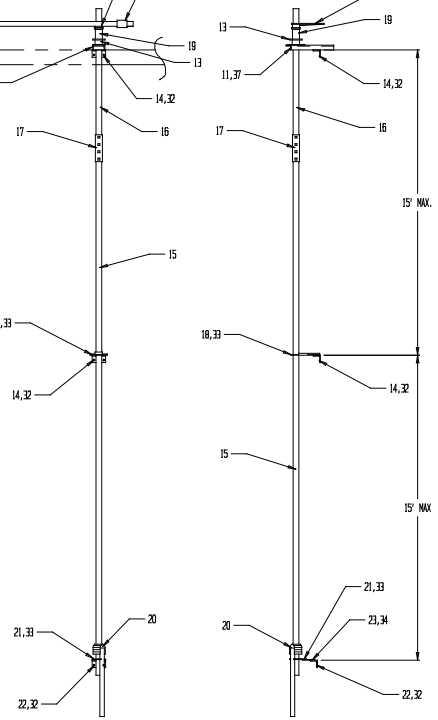

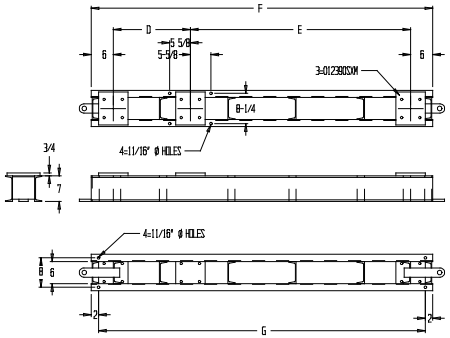

①②③ SWITCHBASE DETAIL

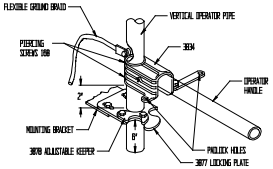

⑳㉑ OPERATOR HANDLE DETAIL

DIMENSIONS (in)									
KV	A	B	C	D	E	F	G	H*	I*
115	84	216	180	21	60	93	89	53 3/8	132 1/4
138	96	216	204	21	72	105	101	62 3/8	148 1/2
161	108	216	228	21	84	117	113	70 3/8	167 1/2

* ADD 3/4" TO H AND I DIMENSIONS WHEN ADDING A VACUUM INTERRUPTER TO SWITCH

QUANTITY						PART	MATERIAL	ITEM	DESCRIPTION
-	-	-	2	2	2	-	GALV	37	MACHINE BOLT 1/2"-13 X 3 1/2" N,LW,FW
-	-	-	-	-	-	A11281	-	36	WORM GEAR OPERATOR (OPTIONAL)
-	-	-	12	12	12	004572AX	ALUM	35	WEDGE WASHER
-	-	-	2	2	2	-	GALV	34	MACHINE BOLT 1/2"-13 X 1 1/2" N,LW
-	-	-	6	6	6	-	GALV	33	CARRIAGE BOLT 1/2"-13 X 1 1/2" N,LW
-	-	-	6	6	6	-	GALV	32	MACHINE BOLT 5/8"-11 X 1 3/4" N,LW
-	-	-	12	12	12	-	GALV	31	MACHINE BOLT 5/8"-11 X 2 1/2" N,LW
-	-	-	-	-	-	-	-	30	-
-	-	-	-	-	-	-	-	29	-
-	-	-	-	-	-	-	-	28	-
-	-	-	3	-	-	-	-	27	TMK40A BLADE ASSY 161KV 3000 AMP
-	-	-	-	3	-	DL064271X088G1	-	26	TMK40A BLADE ASSY 138KV 3000 AMP
-	-	-	-	-	3	DL064271X105G1	-	25	TMK40A BLADE ASSY 115KV 3000 AMP
-	-	-	9	9	9	SEE ORDER	-	24	INSULATOR
-	-	-	1	1	1	005866SXG	GALV	23	EXTENSION PLATE
-	-	-	1	1	1	003860SXG	GALV	22	OPERATOR MTG BRKT
-	-	-	1	1	1	A9270	ALUM	21	LOCKING PLATE ASSY
-	-	-	1	1	1	A13921	GALV	20	OPERATING HANDLE ASSY
-	-	-	1	1	1	008831SXG	GALV	19	2" IPS PIPE SPACER (4")
-	-	-	1	1	1	A9290	GALV	18	PIPE GUIDE
-	-	-	1	1	1	A9259	GALV	17	2" IPS PIPE COUPLING
-	-	-	1	1	1	RN301390	GALV	16	2" IPS SCH 80 PIPE @ 10'- 6"
-	-	-	1	1	1	RN301390	GALV	15	2" IPS SCH 80 PIPE @ 21'- 0"
-	-	-	2	2	2	007133SXG	GALV	14	THRUST BRG/PIPE GUIDE MTG BRKT
-	-	-	1	1	1	A9247	-	13	THRUST BEARING ASSY
-	-	-	1	1	1	A9256	GALV	12	PIPE LEVER ASSY (11")
-	-	-	1	1	1	003988SXG	GALV	11	THRUST BEARING MTG BRKT
-	-	-	1	1	1	RN301370	GALV	10	1 1/2" IPS SCH 80 PIPE @ (SEE DIM. C)
-	-	-	1	1	1	RN301370	GALV	9	1 1/2" IPS SCH 80 PIPE @ (SEE DIM. B)
-	-	-	5	5	5	A9254	GALV	8	1 1/2" IPS CLEVIS ASSY
-	-	-	2	2	2	A9294	GALV	7	BLADE STOP (@ 1/4" MTG)
-	-	-	1	1	1	A9246	GALV	6	PIVOT ASSY 2 LEVER
-	-	-	2	2	2	A9245	GALV	5	PIVOT ASSY 1 LEVER
-	-	-	6	6	6	005735SXMGM	GALV	4	INSULATOR PEDESTAL
-	-	-	3	-	-	012733SXG	GALV	3	TMK40A-161KV SWITCH BASE
-	-	-	-	3	-	012732SXG	GALV	2	TMK40A-138KV SWITCH BASE
-	-	-	-	-	3	012731SXG	GALV	1	TMK40A-115KV SWITCH BASE

	161KV/3000 AMP	138KV/3000 AMP	115KV/3000 AMP
TO:			
CUSTOMER P.O.#			SERIAL NUMBER:

REVISIONS	DATE	BY	MARK
#3 WAS 014053SXG, #37 WAS 3"	5-23-02	MJR	A

___KV ___3000 AMP

TMK40A-115 THRU 161 3000AMP 43° RISE HORIZONTALLY MOUNTED CONTROL MECH

DRAWING #	BY	DATE
SK010901	MRP	9-4-01
SHEET 1 OF 1	APP'D BY	DATE

TURNER ELECTRIC CORPORATION
FAIRVIEW HEIGHTS, IL., USA