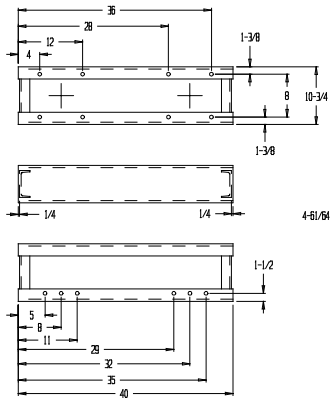

26 G.S. BEARING MTG BRKT DETAIL

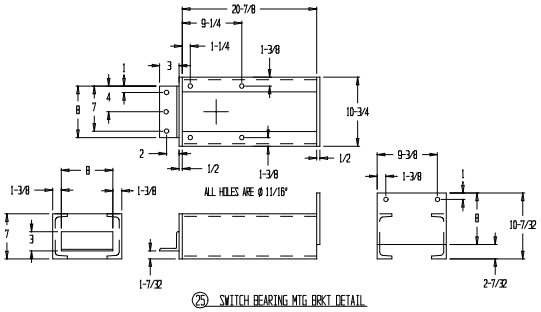

25 SWITCH BEARING MTG BRKT DETAIL

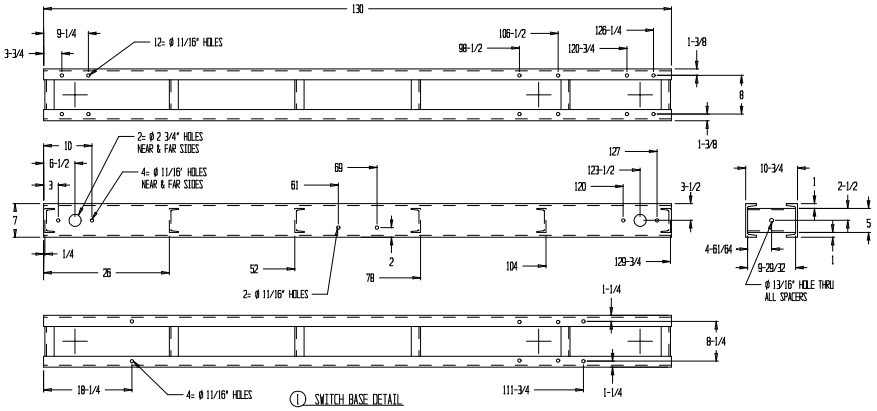

1 SWITCH BASE DETAIL

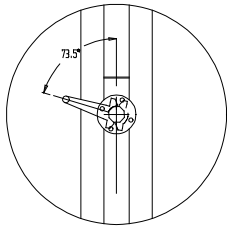

5 3 1/2" DCT. LEVER SETTING DETAIL

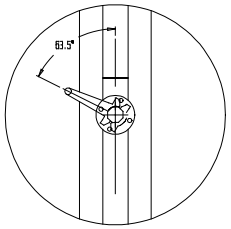

4 2 1/2" DCT. LEVER SETTING DETAIL

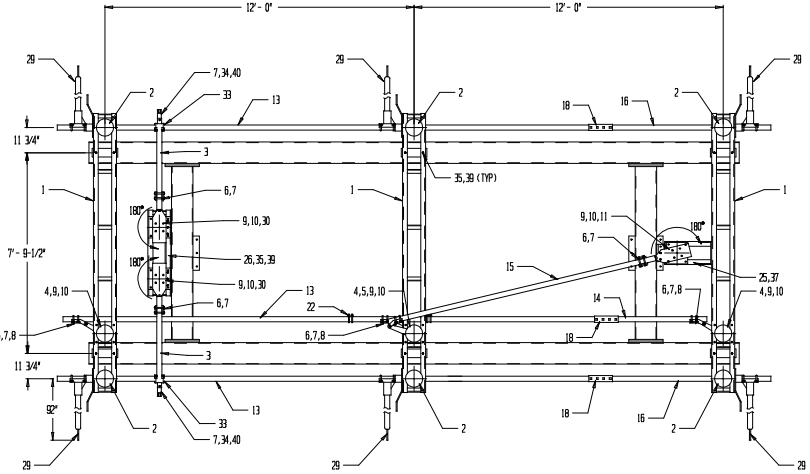

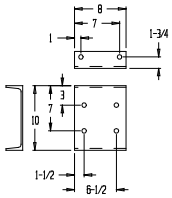

21 WORM GEAR MTG BRKT DETAIL

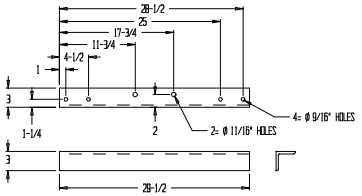

24 G.S. OPER MTG BRKT DETAIL

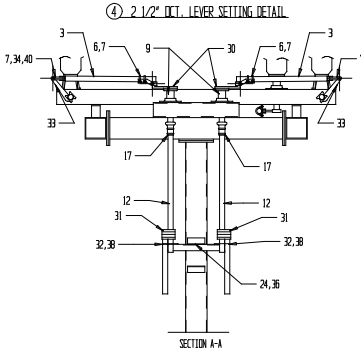

SECTION A-A

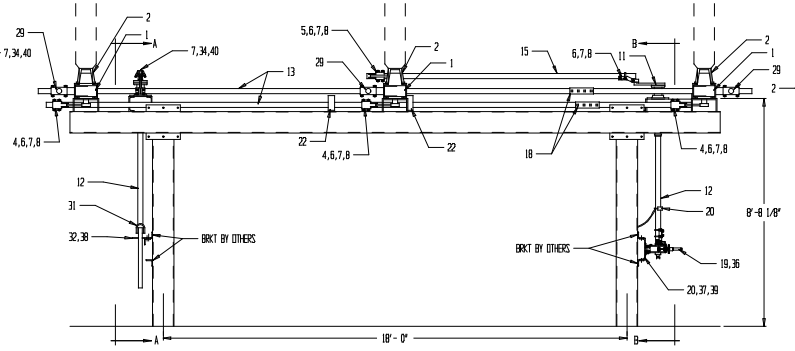

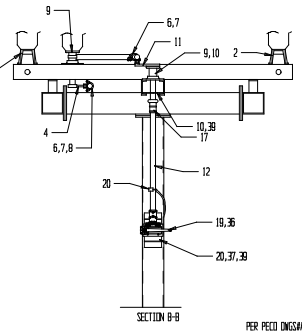

SECTION B-B

PER PECO DWGS#AB-25857-A, SHTS 1&2

QUANTITY	PART	MATERIAL	ITEM	DESCRIPTION
2	DS0434402033	GALV	40	KNUCKLE PIN, 2 3/8"
46	004572AX	ALUM	39	WEDGE WASHER
4	-	GALV	38	CARRIAGE BOLT 1/2"-13 x 1 1/2" N,LW
11	-	GALV	37	MACHINE BOLT 5/8"-11 x 1 3/4" N,LW
6	-	GALV	36	MACHINE BOLT 5/8"-11 x 1 1/2" N,LW
18	-	GALV	35	MACHINE BOLT 5/8"-11 x 2" N,LW
2	DL000131XA00	GALV	34	GROUND SWITCH LINKAGE KNUCKLE
2	DS0460086X007	ALUM	33	12" LEVER FOR 2" PIPE
2	A8049	ALUM	32	G.S. OPERATOR LOCKING PLATE
2	A9264-1	ALUM	31	GROUND SWITCH OPERATOR ASSY
2	DS1284972X059	GALV	30	ADJUSTABLE LEVER ASSY
6	DS1625808611	ALUM	29	GROUND SWITCH BLADE ASSY
9	MP250866X	-	28	INSULATOR (TR304)
3	D0514253DMGM	GALV	27	3/4" SPACER
1	013565SXG	GALV	26	GROUND SWITCH MTG BRKT
1	013563SXG	GALV	25	SWITCH BEARING MTG BRKT
1	013567SXG	GALV	24	GROUND SWITCH OPERATOR MTG BRKT
3	DL064271X101G2	ALUM	23	TMK40A-230KV-3000AMP BLADE ASSY (SK010220)
2	DS115624N000	GALV	22	SWITCH STOP FOR 2" PIPE
1	013566SXG	GALV	21	WORM GEAR MTG BRKT
1	A9719	COPPER	20	GROUND BRAID ASSY
1	A11281	-	19	WORM GEAR OPERATOR
3	A9259	GALV	18	2" PIPE COUPLING
3	DS1122180000	GALV	17	2" PIPE TO 2 1/2" DCT. COUPLING
2	RN801380	GALV	16	2" IPS SCH 40 PIPE @ 7'-0"
1	RN801380	GALV	15	2" IPS SCH 40 PIPE @ 10'-10"
1	RN801380	GALV	14	2" IPS SCH 40 PIPE @ 4'-0"
3	RN801380	GALV	13	2" IPS SCH 40 PIPE @ 21'-0"
3	RN801380	GALV	12	2" IPS SCH 80 PIPE @ 5'-0"
1	DS1284972X061	GALV	11	ADJUSTABLE T.B. LEVER ASSY
12	DS0490911X013	GALV	10	PIVOT ASSY SUPPORT PLATE
6	DS0496350000	GALV	9	SWITCH PIVOT ASSY
4	DS0434300000	ALUM	8	CLEVIS PIN SPACER
9	DS0434402021	GALV	7	CLEVIS PIN, 2 3/4"
7	DS1113038001	GALV	6	2" CLEVIS ASSY
1	DS1113200000	GALV	5	12" RAD. LEVER FOR 3 1/2" DCT.
3	DS1113150000	GALV	4	12" RAD. FOR 2 1/2" DCT.
2	DS1486865X388	GALV	3	GROUND SWITCH PIPE LINKAGE (FIELD CUT AS NEEDED)
6	DM000012XA00	ALUM	2	INSULATOR PEDESTAL
3	013564SXG	GALV	1	SWITCH BASE

TO:

CUSTOMER P.O.# ..... SERIAL NUMBER:

REVISIONS	DATE	BY	MARK

230 KV 3000 AMP

TMK40A23030/43 VERT'L BREAK SW.
CONTROL MECH. w/GROUND SWITCH

DRAWING # SK010207
SHEET 1 OF 1

BY	DATE
TED	8-30-00
APP'D BY	DATE

TURNER ELECTRIC CORPORATION
FAIRVIEW HEIGHTS, IL., USA