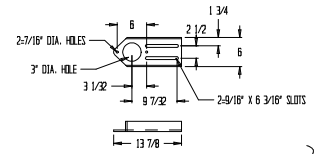

⑪ THRUST BEARING MTG BRKT DETAIL

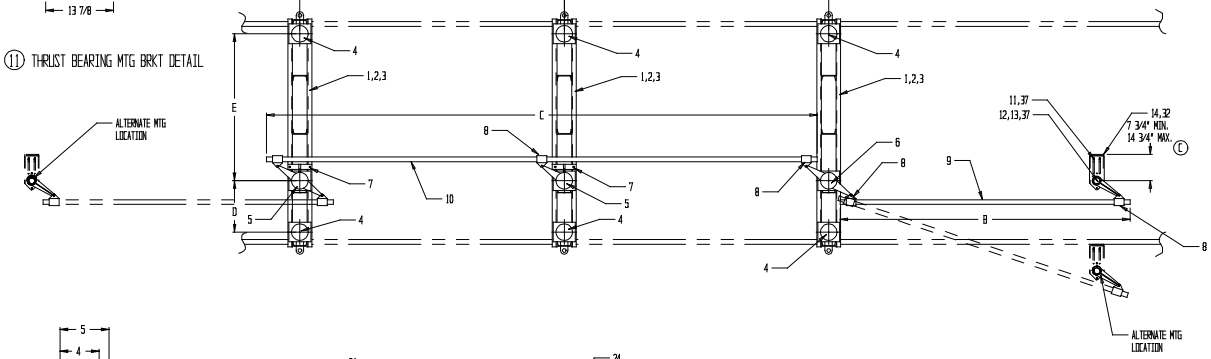

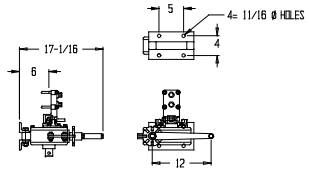

㊱ OPTIONAL WORM GEAR OPERATOR

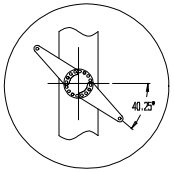

PIVOT SETTING DETAIL Ⓐ

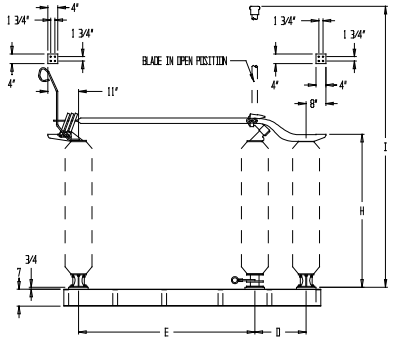

㉕㉖㉗ BLADE DETAIL

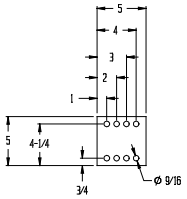

㉓ EXTENSION PLATE DETAIL

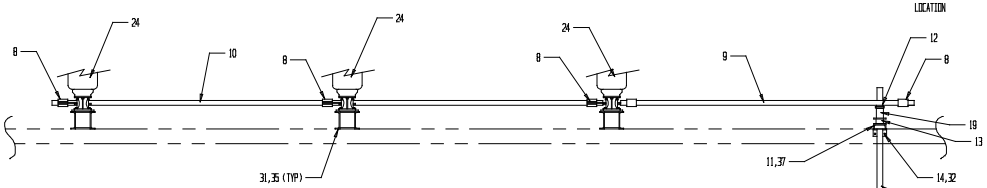

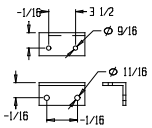

㉒ OPERATOR MTG BRKT DETAIL

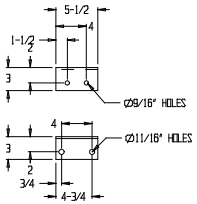

⑭ THRUST BRG & PIPE GUIDE MTG BRKT DETAIL

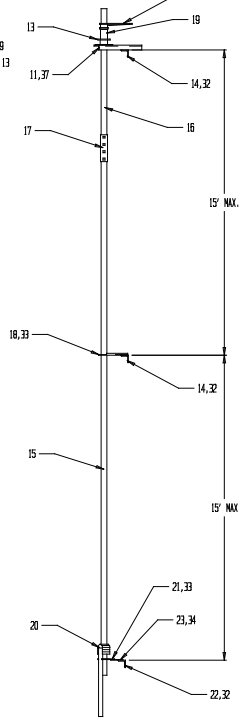

DIMENSIONS (in)									
KV	A	B	C Ⓓ	D	E	F	G	H*	I*
115	84	216	180	21	60	93	89	53 1/2	126 7/8
138	96	216	204	21	72	105	101	62 1/2	147 7/8
161	108	216	228	21	84	117	113	70 1/2	167 7/8

* ADD 3/4" TO H AND I DIMENSIONS WHEN ADDING A VACUUM INTERRUPTER TO SWITCH

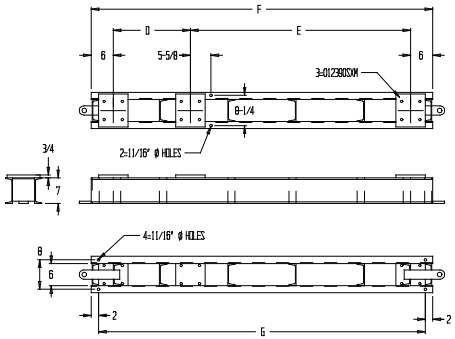

①②③ SWITCHBASE DETAIL

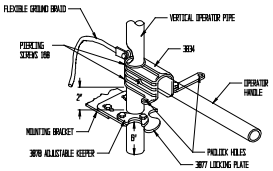

⑳㉑ OPERATOR HANDLE DETAIL

QUANTITY						PART	MATERIAL	ITEM	DESCRIPTION
2	2	2	2	2	2	-	GALV	37	MACHINE BOLT 1/2"-13 X 3 1/2" N,LW,FW
-	-	-	-	-	-	A11281	-	36	WORM GEAR OPER (OPTIONAL)
12	12	12	12	12	12	004572AX	ALUM	35	WEDGE WASHER
2	2	2	2	2	2	-	GALV	34	MACHINE BOLT 1/2"-13 X 1 1/2" N,LW
6	6	6	6	6	6	-	GALV	33	CARRIAGE BOLT 1/2"-13 X 1 1/2" N,LW
6	6	6	6	6	6	-	GALV	32	MACHINE BOLT 5/8"-11 X 1 3/4" N,LW
12	12	12	12	12	12	-	GALV	31	MACHINE BOLT 5/8"-11 X 2 1/2" N,LW
3	-	-	-	-	-	DL064271X073	ALUM	30	TMK40A BLADE ASSY 161KV 1200AMP
-	3	-	-	-	-	DL064271X070	ALUM	29	TMK40A BLADE ASSY 138KV 1200AMP
-	-	3	-	-	-	DL064259X106	ALUM	28	TMK40A BLADE ASSY 115KV 1200AMP
-	-	-	3	-	-	DL064271X087	ALUM	27	TMK40A BLADE ASSY 161KV 600 AMP
-	-	-	-	3	-	DL064271X086	ALUM	26	TMK40A BLADE ASSY 138KV 600 AMP
-	-	-	-	-	3	DL064259X112	ALUM	25	TMK40A BLADE ASSY 115KV 600 AMP
9	9	9	9	9	9	SEE ORDER	-	24	INSULATOR
1	1	1	1	1	1	005866SXG	GALV	23	EXTENSION PLATE
1	1	1	1	1	1	003860SXG	GALV	22	OPERATOR MTG BRKT
1	1	1	1	1	1	A9270	ALUM	21	LOCKING PLATE ASSY
1	1	1	1	1	1	A9265	GALV	20	OPERATING HANDLE ASSY
1	1	1	1	1	1	008831SXG	GALV	19	2" IPS PIPE SPACER (4")
1	1	1	1	1	1	A9290	GALV	18	PIPE GUIDE
1	1	1	1	1	1	A9259	GALV	17	2" IPS PIPE COUPLING
1	1	1	1	1	1	RN301390	GALV	16	2" IPS SCH 80 PIPE @ 10'- 6"
1	1	1	1	1	1	RN301390	GALV	15	2" IPS SCH 80 PIPE @ 21'- 0"
2	2	2	2	2	2	007133SXG	GALV	14	THRUST BRG/PIPE GUIDE MTG BRKT
1	1	1	1	1	1	A9247	-	13	THRUST BEARING ASSY
1	1	1	1	1	1	A9256	GALV	12	PIPE LEVER ASSY (11")
1	1	1	1	1	1	011982SXG	GALV	11	THRUST BEARING MTG BRKT
1	1	1	1	1	1	RN301370	GALV	10	1 1/2" IPS SCH 80 PIPE @ (SEE DIM. C)
1	1	1	1	1	1	RN301370	GALV	9	1 1/2" IPS SCH 80 PIPE @ (SEE DIM. B)
5	5	5	5	5	5	A9254	GALV	8	1 1/2" IPS CLEVIS ASSY
2	2	2	2	2	2	A9294	GALV	7	BLADE STOP (@ 1/4" MTG)
1	1	1	1	1	1	A9246	GALV	6	PIVOT ASSY 2 LEVER
2	2	2	2	2	2	A9245	GALV	5	PIVOT ASSY 1 LEVER
6	6	6	6	6	6	005735SXMGM	GALV	4	INSULATOR PEDESTAL
3	-	-	3	-	-	012733SXG	GALV	3	TMK40A-161 SWITCH BASE
-	3	-	-	3	-	012732SXG	GALV	2	TMK40A-138 SWITCH BASE
-	-	3	-	-	3	012731SXG	GALV	1	TMK40A-115 SWITCH BASE

TMK40A161200	TMK40A138120	TMK40A115120	TMK40A161600	TMK40A138600	TMK40A115600

TO:

CUSTOMER P.O.#

SERIAL NUMBER:

REVISIONS	DATE	BY	MARK
SHOW A11281 WORM GEAR; ADD 600A COLUMNS	3-9-01	MRP	A
REV. DIM. "I", ADDED 600AMP COL.	3-13-01	MJR	B
ITEM 11 WAS 003888SXG	11-12-01	MRP	C
REV PART # FOR ITEMS 28,29; 37 WAS 3"	5-21-02	MJR	D

DRAWING # SK010117

SHEET 1 OF 1

BY	DATE
MJR	2-9-01
APP'D BY	DATE

____KV 600/1200 AMP

TMK40A-115 THRU 161 600/1200AMP HORIZONTALLY MOUNTED CONTROL MECH

TURNER ELECTRIC CORPORATION
FAIRVIEW HEIGHTS, IL., USA