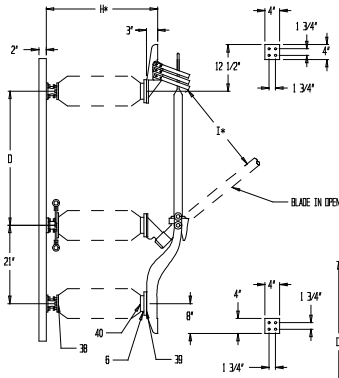

ITEMS 29-33 BLADE DETAIL

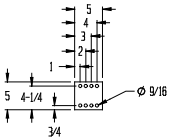

27 OPER. EXTENSION PLATE DETAIL

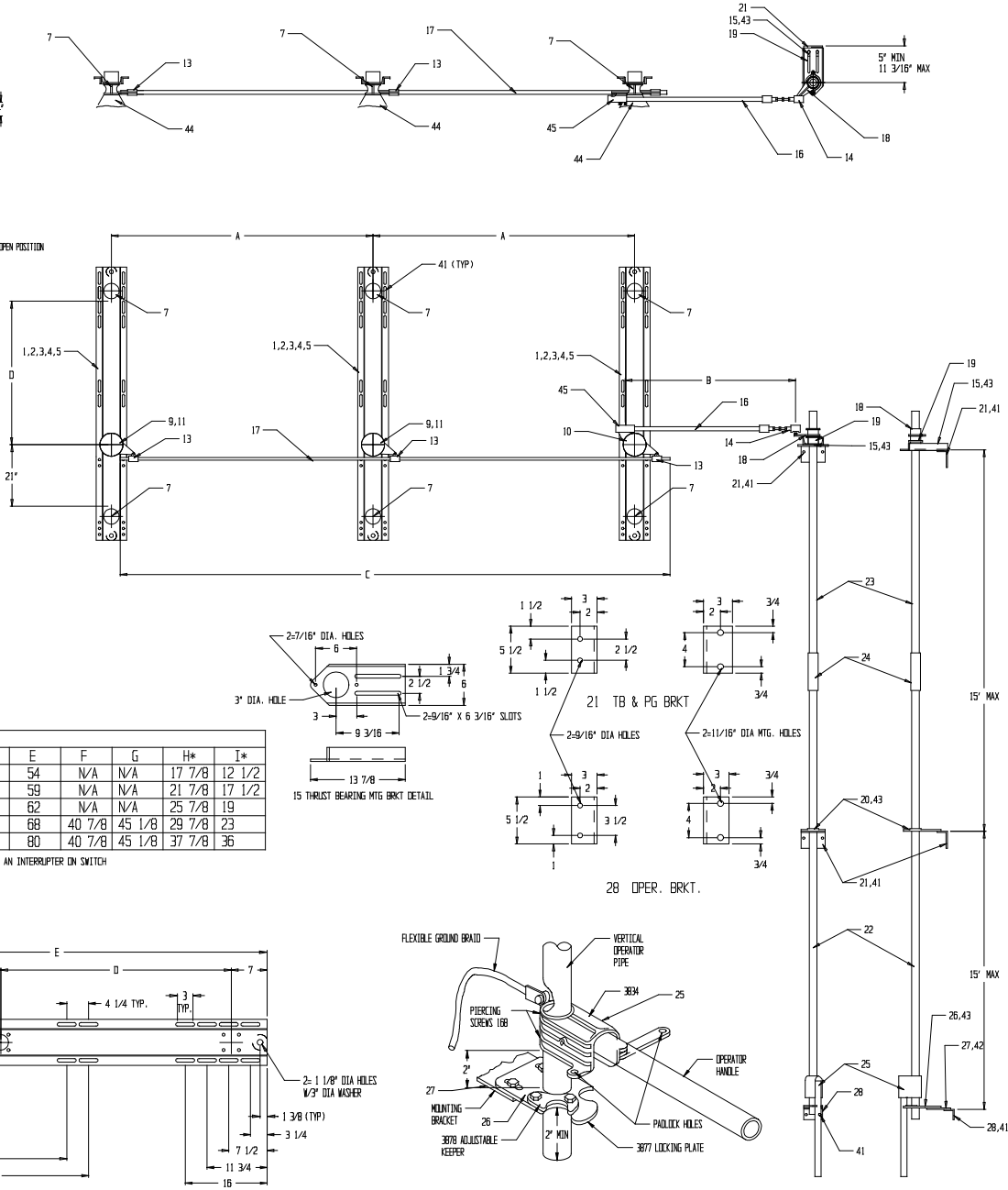

15 THRUST BEARING MTG BRKT DETAIL

21 TB & PG BRKT

28 OPER. BRKT.

DIMENSIONS (in.)									
KV	A	B	C	D	E	F	G	H*	I*
15	36	96	84	19	54	N/A	N/A	17 7/8	12 1/2
23	48	96	108	24	59	N/A	N/A	21 7/8	17 1/2
34.5	60	120	132	27	62	N/A	N/A	25 7/8	19
46	72	120	156	33	68	40 7/8	45 1/8	29 7/8	23
69	84	120	180	45	80	40 7/8	45 1/8	37 7/8	36

*: ADD 3/4" TO DIMENSION H & I WHEN MOUNTING AN INTERRUPTER ON SWITCH

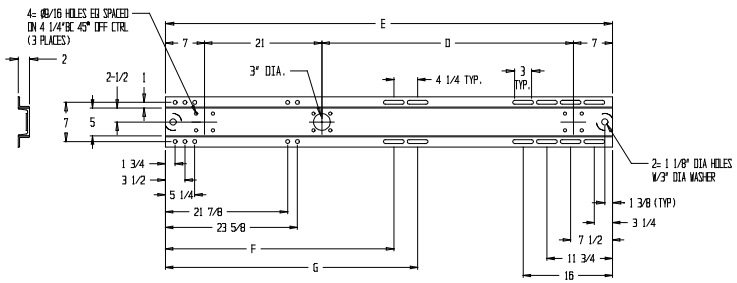

1,2,3,4,5 SWITCH BASE DETAIL

25,26 OPERATOR HANDLE DETAIL

69KV/2000A	46KV/2000A	34.5KV/2000A	23KV/2000A	15KV/2000A	PART	MATERIAL	ITEM	DESCRIPTION
-	-	-	-	-	A9282	GALV	45	CLEVIS CONVERTOR ASSY. (NON-ADJUS.)
9	9	9	9	9	-	-	44	INSULATOR-SEE ORDER FOR DESCRIPTION
6	6	6	6	6	-	GALV	43	CARRIAGE BOLT 1/2-13 X 1 1/2 NUT,LW
2	2	2	2	2	-	GALV	42	MACHINE BOLT 1/2-13 X 1 1/2 NUT,LW
18	18	18	18	18	-	GALV	41	MACHINE BOLT 5/8-11 X 1 3/4 NUT,LW
36	36	36	36	36	-	GALV	40	MACHINE BOLT 1/2-13 X 2, LW
36	36	36	36	36	-	GALV	39	MACHINE BOLT 5/8-11 X 2 1/4 NUT, LW
36	36	36	36	36		GALV	38	MACHINE BOLT 1/2-13 X 1 1/4, LW
-	-	-	-	-		-	37	
-	-	-	-	-		-	36	-
-	-	-	-	-		-	35	-
-	-	-	-	-		-	34	-
3	-	-	-	-	DL064271X096G2	ALUM	33	TMK40AV BLADE ASSY 69KV 2000A
-	3	-	-	-	DL064271X094G2	ALUM	32	TMK40AV BLADE ASSY 46KV 2000A
-	-	3	-	-	DL064271X095G2	ALUM	31	TMK40AV BLADE ASSY 34.5KV 2000A
-	-	-	3	-	DL064271X091G2	ALUM	30	TMK40AV BLADE ASSY 23KV 2000A
-	-	-	-	3	DL064271X092G2	ALUM	29	TMK40AV BLADE ASSY 15KV 2000A
1	1	1	1	1	003860SXG	GALV	28	OPERATING HANDLE MOUNTING BRACKET
1	1	1	1	1	005966SXG	GALV	27	EXTENSION PLATE
1	1	1	1	1	A9269	ALUM	26	OPERATING HANDLE LOCKING PLATE ASSY
1	1	1	1	1	A9265	GALV	25	OPERATING HANDLE ASSY
1	1	1	1	1	A9259	GALV	24	2" PIPE COUPLING
1	1	1	1	1	RM301380	GALV	23	2" IPS SCH 40 PIPE @ 10'-6"
1	1	1	1	1	RM301380	GALV	22	2" IPS SCH 40 PIPE @ 21'-0"
2	2	2	2	2	007133SXG	GALV	21	MOUNTING ANGLE
1	1	1	1	1	A9290	ALUM	20	PIPE GUIDE ASSY
1	1	1	1	1	A9247	-	19	THRUST BEARING ASSY
1	1	1	1	1	A9255	GALV	18	PIPE LEVER ASSY
1	1	1	1	1	RM301320	GALV	17	1" IPS SCH 80 PIPE @ (SEE DIM. C)
1	1	1	1	1	RM301320	GALV	16	1" IPS SCH 80 PIPE @ (SEE DIM. B)
1	1	1	1	1	011982SXG	GALV	15	THRUST BEARING MTG BRKT
1	1	1	1	1	A9280	-	14	CLEVIS CONVERTOR ASSY (ADJUSTABLE)
3	3	3	3	3	A9253	GALV	13	1" CLEVIS ASSY
-	-	-	-	-	-	-	12	-
2	2	2	2	2	A9291	ALUM	11	BLADE STOP
1	1	1	1	1	A9236	BRASS	10	PIVOT ASSY 3" B.C. 2 LEVER (429)
2	2	2	2	2	A9235	BRASS	9	PIVOT ASSY 3" B.C. 1 LEVER (429)
-	-	-	-	-	-	-	8	-
6	6	6	6	6	000109SDXMG	GALV	7	INSULATOR PEDESTAL
9	9	9	9	9	011098SDXMG	GALVSTL	6	3" TO 5" B.C. ADAPTER
3	-	-	-	-	012890SXG	GALVSTL	5	SWITCH BASE, TMK40AV 69KV 2000A
-	3	-	-	-	012889SXG	GALVSTL	4	SWITCH BASE, TMK40AV 46KV 2000A
-	-	3	-	-	012888SXG	GALVSTL	3	SWITCH BASE, TMK40AV 34.5KV 2000A
-	-	-	3	-	012887SXG	GALVSTL	2	SWITCH BASE, TMK40AV 23KV 2000A
-	-	-	-	3	012886SXG	GALVSTL	1	SWITCH BASE, TMK40AV 15KV 2000A
QUANTITY					PART	MATERIAL	ITEM	DESCRIPTION

TO:

CUSTOMER P.O.#

SERIAL NUMBER:

REVISIONS	DATE	BY	MARK
REV ITEM 25, WAS A9264	7-24-01	MR	A
DEL 3/4" IPS PIPE AND CLEVIS	1-25-02	MR	B
ADD ITEM 15; A9247 WAS A9248	3-11-03	MRP	C

KV ____ 2000 AMP

TMK40AV 15KV THRU 69KV 2000A
VERT.MTD FAST SWITCH 43°C RISE

DRAWING #
SK000411
SHEET 1 OF 1

BY	DATE
MRP	4-17-00
APP'D BY	DATE

TURNER ELECTRIC CORPORATION
FAIRVIEW HEIGHTS, IL., USA