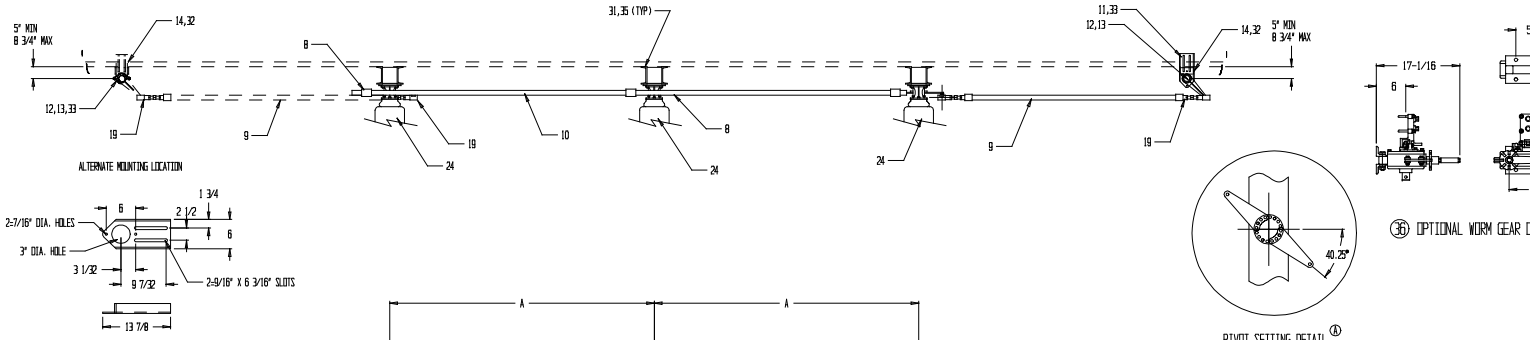

⑪ THRUST BEARING MTG BRKT DETAIL

PIVOT SETTING DETAIL Ⓐ

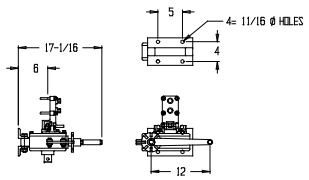

㊱ OPTIONAL WORM GEAR OPERATOR

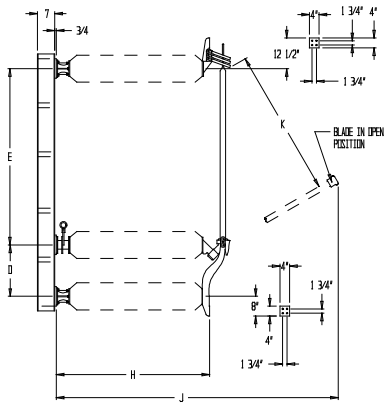

㉕㉖㉗ BLADE DETAIL

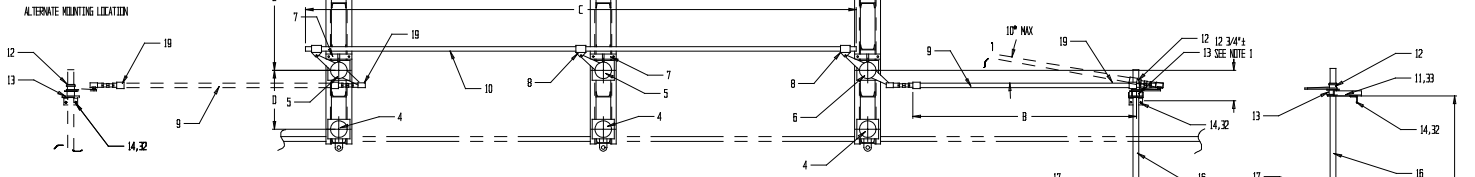

NOTE 1: MAXIMUM ANGLE ON THE CLEVIS CONVERTOR ASSEMBLY IS 10° IN BOTH THE UP OR DOWN POSITION.
THIS APPLIES WHEN IT IS USED BOTH ON THE PIVOT OR PIPE LEVER ASSEMBLY.

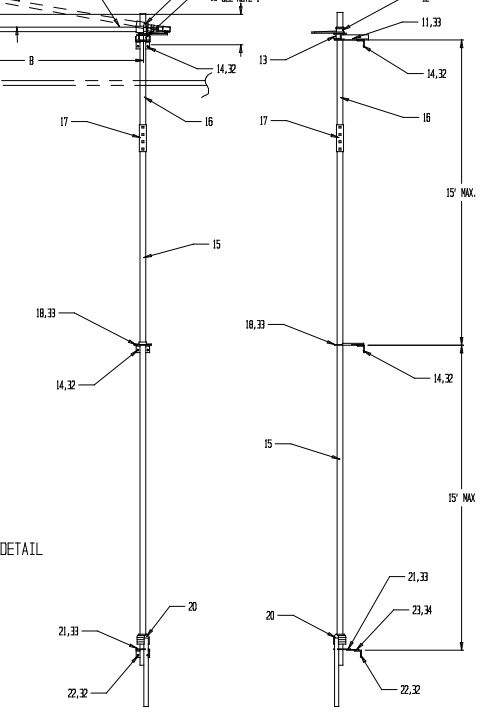

DIMENSIONS (in)										
KV	A	B	C Ⓐ	D	E	F	G	H*	J*	K*
115	84	216	180	21	60	93	89	53 1/2	124 1/2	51
138	96	216	204	21	72	105	101	62 1/2	143 1/2	64
161	108	216	228	21	84	117	113	70 1/2	160 1/2	75

* ADD 3/4" TO H AND J DIMENSIONS WHEN ADDING A VACUUM INTERRUPTER TO SWITCH

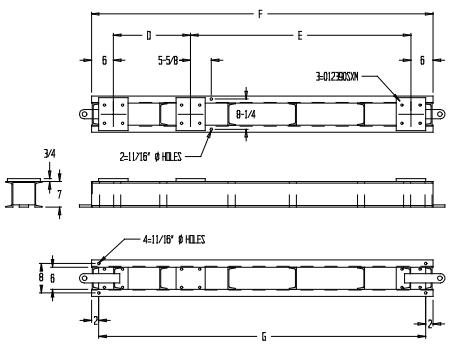

①②③ SWITCHBASE DETAIL

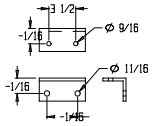

㉒ OPERATOR MTG BRKT DETAIL

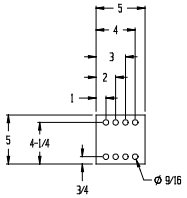

㉓ EXTENSION PLATE DETAIL

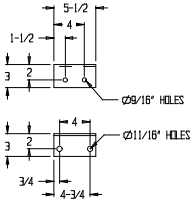

⑭ THRUST BRG & PIPE GUIDE MTG BRKT DETAIL

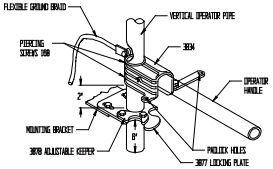

⑳㉑ OPERATOR HANDLE DETAIL

REV.F-8-28-03: REMOVED STATIONARY ARCING HORN FROM BLADE DETAIL
REV.E-5-21-02: REV BLADE ASSY PART #'S

QUANTITY					PART	MATERIAL	ITEM	DESCRIPTION
-	-	-	-	-	A11281	-	36	WORM GEAR OPERATOR (OPTIONAL)
-	-	-	12	12	12	004572AX	ALUM	35	WEDGE WASHER
-	-	-	2	2	2	-	GALV	34	MACHINE BOLT 1/2"-13 X 1 1/2" N,LW
-	-	-	6	6	6	-	GALV	33	CARRIAGE BOLT 1/2"-13 X 1 1/2" N,LW
-	-	-	6	6	6	-	GALV	32	MACHINE BOLT 5/8"-11 X 1 3/4" N,LW
-	-	-	12	12	12	-	GALV	31	MACHINE BOLT 5/8"-11 X 2 1/2" N,LW
-	-	-	-	-	-	-	-	30	-
-	-	-	-	-	-	-	-	29	-
-	-	-	-	-	-	-	-	28	-
-	-	-	3	-	-	DL064271X127G2	-	27	VMK40A BLADE ASSY 161KV 2000 AMP
-	-	-	-	3	-	DL064271X126G2	-	26	VMK40A BLADE ASSY 138KV 2000 AMP
-	-	-	-	-	3	DL064271X125G2	-	25	VMK40A BLADE ASSY 115KV 2000 AMP
-	-	-	9	9	9	SEE ORDER	-	24	INSULATOR
-	-	-	1	1	1	005986SXG	GALV	23	EXTENSION PLATE
-	-	-	1	1	1	003860SXG	GALV	22	OPERATOR MTG BRKT
-	-	-	1	1	1	A9269	ALUM	21	LOCKING PLATE ASSY
-	-	-	1	1	1	A13921	GALV	20	OPERATING HANDLE ASSY
-	-	-	2	2	2	A9279	-	19	CLEVIS CONVERTOR ASSEMBLY
-	-	-	1	1	1	A9290	GALV	18	PIPE GUIDE
-	-	-	1	1	1	A9259	GALV	17	2" IPS PIPE COUPLING
-	-	-	1	1	1	RM301390	GALV	16	2" IPS SCH 80 PIPE @ 10'- 6"
-	-	-	1	1	1	RM301390	GALV	15	2" IPS SCH 80 PIPE @ 21'- 0"
-	-	-	2	2	2	007133SXG	GALV	14	THRUST BRG/PIPE GUIDE MTG BRKT
-	-	-	1	1	1	A9247	-	13	THRUST BEARING ASSY
-	-	-	1	1	1	A12515	GALV	12	PIPE LEVER ASSY (11")
-	-	-	1	1	1	011982SXG	GALV	11	THRUST BEARING MOUNTING BRACKET
-	-	-	1	1	1	RM301370	GALV	10	1 1/2" IPS SCH 80 PIPE @ (SEE DIM. C)
-	-	-	1	1	1	RM301370	GALV	9	1 1/2" IPS SCH 80 PIPE @ (SEE DIM. B)
-	-	-	3	3	3	A9254	GALV	8	1 1/2" IPS CLEVIS ASSY
-	-	-	2	2	2	A9294	GALV	7	BLADE STOP (@ 1/4" MTG)
-	-	-	1	1	1	A9246-1	GALV	6	PIVOT ASSY 2 LEVER
-	-	-	2	2	2	A9245	GALV	5	PIVOT ASSY 1 LEVER
-	-	-	6	6	6	005735SXMGM	GALV	4	INSULATOR PEDESTAL
-	-	-	3	-	-	012733SXG	GALV	3	TH2-161 SWITCH BASE
-	-	-	-	3	-	012732SXG	GALV	2	TH2-138 SWITCH BASE
-	-	-	-	-	3	012731SXG	GALV	1	TH2-115 SWITCH BASE

161KV/2000 AMP	138KV/2000 AMP	115KV/2000 AMP	TO:
			CUSTOMER P.O.#
			SERIAL NUMBER:

REVISIONS	DATE	BY	MARK
REV. PIVOT SETTING DETAIL	2-18-00	BW	A
REV. "C" DIMENSION	4-26-00	BW	B
REV ITEM 20 & 35, WAS A9265 & MP260040X	7-24-01	MR	C
ADD ITEM 11; 13 WAS A9248	11-12-01	MRP	D

___KV 2000 AMP

TMK40AV 115 THRU 161 2000AMP
VERTICALLY MOUNTED CONTROL MECH

DRAWING #	BY	DATE
SK000126	BW	2-2-00
SHEET 1 OF 1	APP'D BY	DATE

TURNER ELECTRIC CORPORATION
FAIRVIEW HEIGHTS, IL., USA